DESCRIPTION OF

AND

OPERATING INSTRUCTIONS

FOR

RECEIVER TYPE CR. 300

Ref. No. T.1864

MARCONI'S WIRELESS TELEGRAPH COMPANY LIMITED

Telegraphic Address:
Inland: EXPANSE ESTRAND LONDON
Foreign: EXPANSE LONDON

THE MARCONI INTERNATIONAL MARINE COMMUNICATION COMPANY LIMITED

Inland: THULIUM ESTRAND LONDON
Foreign · THULIUM LONDON

MARCONI OFFICES, ELECTRA HOUSE
VICTORIA EMBANKMENT
LONDON, W.C.2

Codes:
Marconi International, Western Union, Bentley's,
A.B.C. 5th & 6th Ed., Lieber's, Scott's

Telephone:
TEMPLE BAR 4321
(Private Branch Exchange)

TABLE OF CONTENTS.

	PAGE
GENERAL DATA	v
SECTION 1.	
GENERAL CHARACTERISTICS	1
SECTION 2.	
OPERATION	2
SECTION 3.	
TECHNICAL DESCRIPTION	4
GENERAL NOTES	4
Frequency Band	4
Calibration and Tuning	4
Selectivity Range	4
Aerial Input	5
Outputs	5
Controls	5
Supplies	5
Output	5
CIRCUIT DESCRIPTION	5
Signal Frequency Circuits	6
Intermediate Frequency Amplifier	6
2nd Detector, A.G.C. Rectifier and 1st L.F. Amplifier Circuits	6
Gain-Control Circuits	6
Beat Frequency Oscillator	6
Low Frequency Circuits	7
Crystal Calibrator	7
Desensitising Control	7
Emergency Crystal	7
MECHANICAL DESIGN	7
Mounting	8
External Connections	8
POWER SUPPLY UNIT TYPE 889	8
Circuit Arrangement	8
Mechanical Design	8
SECTION 4.	
PERFORMANCE DATA	9
Sensitivity	9
Image Protection	9
I.F. Selectivity	9
L.F. Response	9
Overall Fidelity	10
Output and A.G.C.	10
Thermal Drift	10
SECTION 5.	
INSTALLATION	11
Mounting	11
Mains Working	11
Battery Working	12
Aerial Input	12
Desensitising	12

PAGE

SECTION 6.

MAINTENANCE AND SERVICING 13
Emergency Servicing 13
Replacing Drum and Pointer Cords 14
Circuit Checks 15
Receiver Alignment 16

SECTION 7.

DIAGRAMS AND COMPONENT PARTS 21
Dimensioned Drawings of Receiver and Supply Unit 21
Performance Curves 23
Component Parts—Receiver .. .. 25—30
Simplified Diagram of Connections—Receiver 31
Circuit Diagram of Connections—Receiver 33
Component Parts—Supply Unit .. .. 35—36
Circuit Diagram of Connections—Supply Unit 37
Valve Positions and Testing Points—Receiver 39
Connections to Valve Bases 41
Fixing Range Drum Cord 41
Rotary Switch Connections .. .. 43—45

GENERAL DATA.

Frequency Range .. .. 15 kc/s — 25 Mc/s in 8 bands.

Supply Requirements—

Receiver Alone.. .. .. 0.95 A. at 24 volts and 60 mA. at 250 volts.

Type 889 *Supply Unit.*

The receiver can be operated direct from H.T. and L.T. batteries or via the Type 889 Supply Unit which is adaptable for use on any of the following supplies :—

230 volts 50 c.p.s.	consumption 60 W.
24 volts D.C.	consumption 54 W.
110 volts D.C.	consumption 60 W.
220 volts D.C.	consumption 60 W.

Receiver Input.

Input arranged for satisfactory operation at all frequencies from single wire aerial not exceeding 700μμF (including feeder). At higher frequencies input will approximately match 100 ohms feeder.

Sensitivity.

For 20 db signal to noise ratio (C.W.)—

From 85 kc/s to 25 Mc/s	2μV to 5μV
From 15 kc/s to 85 kc/s	35μV to 70μV

Receiver Output.

To self-contained loudspeaker (with connections for extension) .. .. 2 W.

To 60 ohms Headphones (Two Jacks and connections for extension) .. .. .. 10 mW.

Valves—See page 4.

Dimensions and Weight.

	Width.	*Depth.*	*Height.*	*Weight.*
Receiver Unit	$18\frac{3}{4}$ in.	$15\frac{1}{2}$ in.	$13\frac{5}{8}$ in.	55 lbs.
Supply Unit	$6\frac{3}{16}$ in.	$13\frac{1}{4}$ in.	$8\frac{5}{8}$ in.	21 lbs.

A. Coarse and Fine Tuning Control.
B. Band-change Switch.
C. Operational Switch.
('PHONE-OFF-C.W.-Calibrate.)
D. Pass-band Switch.
E. H.F. Gain Control.
F. L.F. Gain Control.
G. A.G.C. Switch.
H. Power Switch.

MARCONI RECEIVER TYPES CR. 300/1 and CR. 300/2 and SUPPLY UNIT TYPE 889.

DESCRIPTION

AND

OPERATING INSTRUCTIONS

FOR

RECEIVER TYPE CR.300.

SECTION 1.

GENERAL CHARACTERISTICS.

This receiver provides a high standard of performance for general purpose reception over its very wide frequency range of 15 kc/s to 25 Mc/s, 20,000 to 12 metres. In conjunction with its supply unit it may be operated from most of the sources of supply normally available.

It is of the superheterodyne type and avoids gaps in the frequency range by selecting either of two intermediate frequencies, i.e., 570 kc/s or 98 kc/s according to the signal frequency.

The receiver will give thoroughly satisfactory operation with a single wire aerial not exceeding 700μμF in capacity including feeder. The use of a screened down lead will help to avoid strong interference fields in the receiving building itself.

The use of controlled feedback ensures a high order of I.F. selectivity, which is adjustable by switch-control over a wide range of pass-bands.

The salient features of the receiver are briefly listed below.

Salient Features.

(*a*) *High Electrical Performance.*

In addition to the flexible selectivity range provided, the receiver sensitivity at low frequencies is adequate for working down to basic radio noise (static, etc.) with the aerial suggested. In spite of the extended frequency range it has been possible to maintain the sensitivity at the higher frequencies to approximate to that of receivers limited to high frequency reception only.

(*b*) *Self-checking Calibration.*

The Type CR. 300/1 receiver includes a 500 kc/s crystal oscillator switched on by a front of panel control, and harmonics of the latter frequency may be introduced into the input circuit of the receiver. As these harmonics coincide with main calibration frequencies on the calibration dial, the calibration may be instantaneously checked to crystal standards of accuracy without the use of external apparatus.

The Type CR. 300/2 edition includes a similar crystal operating at 690 kc/s in order to provide harmonic points corresponding to the calling frequencies used for Marine short-wave bands.

(*c*) *Temperature Compensation.*

The first frequency change oscillator is so compensated for thermal drift that this factor becomes negligible within 30 minutes of switching on.

(*d*) *Logging Scale.*

The receiver embodies the calibration and log arrangements standard for the CR. series of receivers. Operation of the bandchange switch brings into view a scale showing only the frequencies covered by that switch position. Additionally a logging scale provides the operator with facilities for noting the readings of a particular station with a discrimination greatly exceeding that of the absolute calibration scale.

SECTION 2.

OPERATION.

Section 5 deals with the correct installation of the receiver according to the type of aerial, power supply, and other requirements governing the installation.

It is essential to check that the tap adjustments on the Type 889 *Supply Unit have been made to suit the supply being used with the receiver before it is connected to its supply source and switched on.*

Assuming that the receiver has been correctly installed the following instructions give all the information essential for the correct use of the receiver.

(1) SWITCH ON the supplies to the power unit and receiver. The warning lamp on the power unit and the receiver scale lamps should light.

Place other controls as follows :

(2) OPERATIONAL SWITCH	—Position " CW."
(3) A.G.C. SWITCH	— ,, " ON."
(4) PASS-BAND SWITCH	— ,, " N."
(5) L.F. GAIN	—Mid Position.
(6) H.F. GAIN	—Maximum clockwise, reducing if necessary to give comfortable level in headphones.
(7) BAND-CHANGE SWITCH	—Select the frequency band required. (The frequency calibration for each band is automatically brought into view on the calibration drum).
(8) TUNING	—Adjust the pointer on the calibration scale to the desired frequency by the larger tuning knob, and turn the smaller knob *slowly* about one revolution on either side until the carrier of the wanted station is heard. If R/T (telephone) is to be received, change the operational switch to "PHONE" and retune slightly. Reduce the signal to a suitable level by turning the R.F. Gain control counter-clockwise.

Always switch off the supplies to the power unit as well as to the receiver when closing down for long periods.

Use of Pass-band Switch.

The " W " position gives best intelligibility of speech and makes tuning broader, but can only be used when little interference is present. Switching to " M " and " N " cuts down interference progressively, but the signal must be tuned more carefully and accurately. The " F " position demands very careful tuning and must only be used for " C.W." It is most suitable for use on Bands 1—5.

N.B. When receiving "C.W." with the Pass-band switch at "W" of "M," it will be found that on tuning through zero beat, the beat note obtained is equally strong on both sides of the latter, but when using positions " N " or " F " one side will give a stronger note than the other. Always tune to the stronger of the two.

Use of Automatic Gain Control.

The A.G.C. should be switched off only if the wanted signal is weak and is adjacent to a strong signal or interference.

Use of Gain Controls.

WITH A.G.C. ON	Set H.F. gain control at maximum except for very strong signals.
WITH A.G.C. OFF.	Set H.F. gain control as desired.
	Set L.F. gain control approximately at mid-position.

Warming Up.

The receiver takes a few minutes to warm up, and about 15 minutes to reach stability. Use the " Off " position of the operational switch to switch off for short breaks, as the valve heaters are left on and the receiver is ready for immediate use.

Desensitising Control.

This normally should be left fully clockwise. It is only required for desensitising the receiver from the back contacts of the transmitting key (or keying relay) of an associated transmitter.

Use of Calibrator.

In order to use the calibrator, switch the operational switch to the position marked " CALIBRATE." For the Type CR. 300/1 receiver this will cause a C.W. signal to be injected at the receiver input at every sub-division of the calibration scale which is a multiple of 500 kc/s. This provides a ready means of checking whether the calibration of the receiver is accurate and allowing for any discrepancies in searching for a station of known frequency. The calibrate signal is distinguished from others by switching from " CALIBRATE " to " C.W." since the calibrator signal will disappear when this is done.

In the case of the Type CR. 300/2 receiver the crystal frequency is 690 kc/s, and its harmonics permit accurate setting of the receiver to multiples of this frequency.

Use of Logging Scale.

This scale is not for reading frequency directly, but for noting accurately how to re-set the tuning control to a station which has once been found.

Read the divisions from left to right, main divisions on the upper scale A and sub-divisions on the lower scale B.

Use of Emergency Crystal.

In the event of the complete failure of valves or power supplies, the reception of strong signals is possible by the use of the emergency crystal provided. To bring this into circuit transfer the lead from the top cap of the 1st valve (close to rear section of tuning condenser) to the similar cap mounted on the carborundum crystal board.

Optimum tune points will be found to be slightly lower than indicated by the calibration scale.

SECTION 3.

TECHNICAL DESCRIPTION.

(*a*) GENERAL.

The valve complement of the receiver is as under :

Type.	*Number.*	*Use.*
ARTH2 (for CR. 300/1 or KTW61 (for CR. 300/2)	1	Signal Frequency Amplifier.
X66 or 6K8	1	Frequency Changer.
KTW61	2	Intermediate Frequency Amplifiers.
DH63	1	Second Detector, A.G.C. Rectifier and L.F. Amplifier.
KTW61	1	Beat Frequency Oscillator.
6V6G	1	Output.
KTW61	1	Calibration Oscillator.
Type 889 Supply Unit :		
OZ4	1	H.T. Fullwave Rectifier.

As shown in the illustration the receiver unit conforms in general appearance to the general characteristics of the CR. series and is mounted in a robust metal cabinet finished in Marconi grey. The power supply unit matches the receiver in general appearance.

Frequency Band.

The overall frequency range of 15 kc/s to 25 Mc/s is covered by eight positions of the frequency band switch as follows :—

Switch Position.	*Frequency Band.*	*Switch Position.*	*Frequency Band.*
1	15 kc/s — 85 kc/s.	5	1 Mc/s — 2.6 Mc/s.
2	85 ,, — 210 ,,	6	2.6 ,, — 6.8 ,,
3	210 ,, — 550 ,,	7	6.8 ,, — 17 ,,
4	375 ,, — 1,000 ,,	8	15 ,, — 25 ,,

Two values of I.F. are used, viz. : (*a*) 98 kc/s—on bands 1 and 4. (*b*) 570 kc/s—on bands 2, 3, 5, 6, 7 and 8.

Calibration and Tuning.

In addition to selecting the required coils, the band switch rotates a calibration roller, bringing into view the full frequency scale of the band in use, as for the other receivers in the CR. series. The main tuning control moves a pointer across the frequency scale and also rotates the logging scale discs. This logging scale has an equivalent length of 18 feet and its 1,250 divisions can be read to one-quarter division. At 20 Mc/s one scale division is equal to a 13 kc/s change of frequency.

Selectivity Range.

The four-position pass-band switch is indexed on the front of panel with initial letters corresponding to " wide," " medium," " narrow " and " filter " positions.

The first three conditions are effected by control of the intermediate frequency characteristics, e.g., coupling and feed back. The filter position introduces, after the narrowest I.F. pass-band, low frequency circuits tuned to approximately 1,000 c.p.s. and having a pass-band of 100 c.p.s.

The nominal pass-bands available with the 98 kc/s I.F., i.e., bands 1 and 4, are as follows :

Wide	2,200 c.p.s., i.e., frequencies	± 1,100 c.p.s.	in relation to the carrier.
Medium	1,800 ,, ,, ,,	± 900 ,,	in relation to the carrier.
Narrow	1,500 ,, ,, ,,	± 750 ,,	in relation to the carrier.

The corresponding pass-bands available on 570 kc/s I.F., i.e., ranges 2, 3, 5, 6, 7 and 8, are as follows :

Wide	5,000 c.p.s., i.e., frequencies	± 2,500 c.p.s.	in relation to the carrier.
Medium	4,000 ,, ,, ,,	± 2,000 ,,	in relation to the carrier.
Narrow	2,000 ,, ,, ,,	± 1,000 ,,	in relation to the carrier.

Aerial Input.

The input is arranged for working with a single wire aerial connected via a 75 to 100 ohm unbalanced feeder, the total capacity of aerial and feeder should not exceed 700μμF. The concentric input plug will fit screened cables such as the Uni-radio Types Nos. 1, 6, 18, 19 and 31.

Outputs.

In addition to the self-contained loudspeaker and headphone points the receiver is provided with connections on the seven-way socket for extension outputs. The full output facilities are therefore :

(1) Two local headphone points, suitable for 60 ohm (nominal) headphones, level 10 mW.
(2) The local loudspeaker, 3.5 ohms special coil, switched off by insertion of the local headphones. Maximum level approximately 2 Watts.
(3) An extension loudspeaker, 3.5 ohms coil, unaffected by insertion of the local headphones
(4) An extension output similar to that for the local headphones, i.e., 10 mW maximum into 60 ohm headphones. This is unaffected by insertion of the local headphones. Since the working impedance of 60 ohm headphones is approximately 600 ohm, this extension output may be used for a 600 ohm line.

(3) and (4) are available on special request.

Controls.

The receiver controls are :

Main tuning condenser (fast and slow drive).
Tuning band switch.
Pass-band selection.
Operational switch (selecting Telephone or CW reception and controlling the calibrating Oscillator).
A.G.C. on-off switch.
H.F. Gain.
L.F. Gain.
On-off switch.

N.B. There is also incorporated a preset control, mounted behind the front panel but accessible through the latter, for controlling a desensitising voltage when working in conjunction with a local transmitter.

Supplies.

The receiver unit seven-way socket may be supplied directly with 0.95 amps at 24 volts and 60 mA. at 250 volts D.C.

When the receiver is fed from the Type 889 Supply Unit, the latter is adaptable to operate as under.

From 24 V. D.C.	Consumption 54	Watts.
„ 110 V. D.C.	Consumption 60	„
„ 220 V. D.C.	Consumption 60	„
„ 230 V. A.C.	Consumption 60	„

Output from Supply Unit.

H.T. — 250 volts at 60 m/A.
L.T. — 24 volts at 1 amp. A.C.

When run from 24 volts D.C. supply the L.T. output will be 24 volts D.C.

A full description of the supply unit is given on page 8.

(*b*) DETAILED CIRCUIT DESCRIPTION.

In summary the circuit is basically a straightforward superheterodyne using one signal-frequency amplifier valve, a frequency changer, two intermediate-frequency amplifier valves, a combined 2nd detector and first low-frequency amplifier, and, finally, an output stage. Additionally there is a separate Beat Note oscillator valve, while an eighth valve functions as a crystal-controlled calibrating oscillator.

The requirement of covering a very wide frequency range without gaps or " blind-spots " has imposed the necessity of having two values of I.F. The value of I.F. in use at any time is selected by a switch linked to the signal-frequency wave-band switch.

The electrical circuits can be followed more readily if reference is made to the diagrams on pages 31 and 33.

Signal Frequency Circuits.

Dealing with the circuit sequence in more detail the stages begin with a signal-frequency amplifier (V1) working into a tuned-anode circuit and thence to the grid of the frequency changer (V2) ; two circuits tuned to the signal frequency are thus provided. Ganged to these is the 1st oscillator tuning circuit ; the latter is connected to the triode portion of the frequency changer (V2).

The signal frequency and 1st oscillator sections are conventional except for two features which call for special comment.

(*a*) On Band 1 the input circuit from the aerial to V1 consists of an I.F. rejector and a Low-pass filter, while between V1 and V2 a further Low-pass filter section replaces the tuned circuits used for the other ranges.

(*b*) A second feature concerns the tuning of Band 8 where, in series with each section of the main tuning condenser, fixed capacities C8, C25 and C42 are introduced ; these have the effect of reducing the effective sweep on this Band. In addition to improving the discrimination of the tuning control, frequency scale and logging scale this device maintains a higher circuit impedance with advantages in signal frequency gain and 1st oscillator stability.

To minimise unwanted coupling between the 1st oscillator and the aerial circuit an insulated coupling is provided for the aerial section of the main tuning condenser, while the shaft operating the band-change switch is similarly insulated from the main switch shaft.

Thermal drift of the 1st oscillator is minimised by a bi-metal compensating condenser C114 connected across the tuned circuit.

Intermediate Frequency Amplifier.

The output from the frequency changer V2 is at one or other of the two intermediate frequencies, 98 kc/s or 570 kc/s, depending upon the signal frequency band in use. The former is in use on Bands 1 and 4 and the latter on the other bands. The change is effected by switches S8—S11 mechanically linked to the band-change switch S1—S7.

Apart from the above the I.F. circuits are conventional. A measure of regenerative feed-back is provided by a small amount of capacity feed-back between anode and grid of the second I.F. stage (V4), the magnitude of this being controlled by cathode bias variation by the four position switch S12. As the latter is moved from its extreme counter-clockwise position (Wide pass-band) it progressively cuts out bias resistors R71 and R70. The same switch also modifies the L.F. response (see below).

2nd Detector, A.G.C. Rectifier and 1st L.F. Amplifier Circuits.

The 2nd Detector stage (V5) is a conventional double-diode-triode, but it will be noted that the coupling from the separate B.F.O. (V6) is introduced directly to the signal diode of V5, while the A.G.C. voltage rectified by the other diode of this valve is derived from the anode of V4. By using a reduced coupling factor between the last pair of I.F. units (Nos. 4 and 5) this permits the use of a generous B.F.O. voltage without danger of this operating the A.G.C. circuit.

An L.F. gain control is interposed between the signal diode output filter and the grid of the triode.

Gain-Control Circuits.

Auto-gain bias is fed back to the grids of the signal frequency and 1st I.F. valves (V1 and V3). Manual control of gain is effected by cathode bias variation by R53 on these valves. The auto-gain voltage can be shorted out by switch S14.

Beat Frequency Oscillator.

The beat frequency oscillator is of the electron coupled type, possessing complete immunity from " locking " or " pulling " with large input signals. It is switched on when S13 (operational switch) is moved to its " C.W." position. It is tuned by preset inductance trimmer adjustment to a frequency 1 kc/s higher than the I.F., so that maximum output is obtained for a beat note of 1,000 c/s.

Low Frequency Circuits.

The output stage is normally resistance coupled from the anode of V5. The pass-band switch (S12), referred to under the notes on V4 above, also switches the shunt capacity C100 thus modifying the L.F. response. R37 in conjunction with R41 is merely introduced to equalise the overall gain.

In the fully clockwise position of this switch the two-stage note filter is introduced ; this comprises the tuned inductances L37 and L38 which resonate at approximately 1,000 c.p.s.

The output transformer is provided with three separate secondary windings for :

(*a*) The loudspeaker in the receiver.

(*b*) The telephone outputs both in the receiver and via the extension points.

(*c*) The extension loudspeaker of 3.5 ohms.

Crystal Calibrator.

A crystal controlled oscillator circuit embodying V8 provides an internal source of checking signals. The fundamental frequency is 500 kc/s (CR. 300/1 Edition) or 690 kc/s (CR. 300/2 Edition) and is accurate to within .02%. This provides artificial signals at intervals of 500 kc/s or 690 kc/s to the upper frequency limit of the receiver (25 Mc/s). To increase the strength of the higher harmonics the output from the oscillator is coupled via small capacities C110 and C111 directly to the first tuned circuits on Bands 7 and 8. On the lower frequencies the stray coupling from this injection lead to the first circuit gives adequate input level. This oscillator is switched in at the fully-clockwise position of the operational switch, S13.

Desensitising Control.

An additional preset cathode bias resistance R54 is arranged in series with the normal cathode bias control in such a way that when in circuit the gain of the receiver can be reduced by any desired amount. Connection between its junction with R53 is brought to Pin 1 on the seven-way socket to enable it to be wired up to a pair of back contacts on the transmitting key (or keying relay). When not required this control should be set to its zero position—fully clockwise.

Emergency Crystal.

To comply with Board of Trade regulations for merchant shipping an emergency crystal detector (Q2) is provided. It can be introduced by transferring the top cap from the grid of V1 to a special point provided on the crystal assembly.

(*c*) MECHANICAL DESIGN.

This receiver is of all steel construction of approximately cubic form comprising four principal components.

The main chassis carries all major components with the exception of the loudspeaker. The panel is designed to be readily removable from the chassis, and carries the loudspeaker. The case forms the two sides, the back and the top of the structure. It is fastened to the panel and chassis by self-tapping screws. The base cover plate is screwed to the underside of the chassis.

Both the case and the base-cover plate can be quickly removed without disturbing any connections and, if required, the panel can likewise be removed after isolating four connections. The receiver can be completely tested in this condition, i.e., without its case, panel and base plate.

For normal inspection, valve replacements, etc., a hinged lid gives easy access through the top of the case.

A departure from common practice has been made in the design of the main chassis in that the latter consists of $\frac{1}{16}$-in. steel channel section bent up to form a foundation frame with a stiffening division welded across. The main platforms are screwed down on to this foundation.

The larger of these is a $\frac{3}{32}$-in. steel deck which carries the signal-frequency and oscillator circuit components including the main tuning condenser and drive, the wave-band switching and S.F. coil sub-assemblies.

The three sub-assemblies, embodying the aerial circuits, the H.F. stage anode circuits and the first frequency-change oscillator circuits are independently removable.

The shaft of the wave-band switch must be withdrawn and the unit connections unsoldered.

Note that the first two sub-assemblies (Aerial and H.F. circuits) are held off the chassis by insulated bushes.

The smaller platform, mounted alongside the above, carries the I.F. and L.F. components.

These two main sub-assemblies are designed to be as self-contained as possible, so that they can be assembled and tested as separate units before fitting to the " foundation " frame.

The case is provided with recessed carrying handles, and finished in grey cellulose.

Mounting.

The underside of the main chassis frame carries four O.B.A. tapped blocks by which two transverse mounting straps (supplied with the receiver) can be fitted. For incorporation in a steel rack these straps can be dispensed with, in which case the receiver can be secured directly to its steel shelf using the four O.B.A. fittings referred to above.

The back of the receiver is free from projections and can be mounted close to a wall or bulkhead.

External Connections.

With the exception of the headphone jacks (in the conventional front panel position) all connections from aerial, earth, power supply and auxiliary fittings are made via screened plugs to a group of sockets concentrated on the left side of the chassis close to the rear. These do not interfere with removal of the case.

SUPPLY UNIT TYPE 889.

Circuit Arrangement—See WE/W.7350/C, page 37.

The unit embodies a non-synchronous vibrator element which converts the D.C. supply into A.C. at 105 c.p.s. This output passes to the transformer through a tapping switch. The main secondary winding of the transformer supplies a full wave rectifier, the output from which is taken through a filter to the multi-way output socket. An auxiliary secondary winding provides unrectified supply of 24 volts for operating the valve heaters of the receiver. A three-way switch selects the correct primary winding for the input voltage and this switch also controls the ballast resistance necessary on the higher voltages for keeping the supply voltage operating the driving coil of the vibrator at its correct value of 24 volts.

Separate taps on the transformer primary winding enable 230 volts A.C. supply to be used and in this case the vibrator element and its filter circuits are isolated.

When using a 24 volts D.C. supply, the valve heaters may be supplied directly from this source.

The distributor board provides separate input terminals for each different supply voltage. If a unit is connected to suit one supply voltage and another voltage is accidentally applied it will not, of course, operate but no damage will result.

Full information for linking the distributor terminals to suit the various supplies is printed on the side of the chassis and is also given in Section 5, page 11.

Mechanical Design.

All components are mounted on a simple front panel and chassis which may be withdrawn for inspection by releasing two 2.B.A. cheese-head screws just above the terminal input board on the front panel.

Supply inputs are taken via a six-way terminal block near the bottom of the front panel. The output is taken from the multi-way socket above the input terminal block. The front panel carries the warning lamp, the power switch and fuse.

SECTION 4.

PERFORMANCE.

1. **Sensitivity.**

In the table below sensitivity is expressed in Column 4 as the unmodulated input signal required to give a signal-to-noise ratio of 20 db.

For this test the receiver pass-band switch should be set at " N," except on Band 1 when the " F " position should be used.

2. **Image Protection.**

The amount by which the image signal is attenuated as shown in Column 5.

Band.	*Frequency.*	*Dummy Aerial.*	*Sensitivity.*	*Image Protection.*
1	18 kc/s	200μμF	70μV	60 db
	80 ,,	200 ,,	35 ,,	60 ,,
2	85 ,,	200 ,,	7 ,,	80 ,,
	200 ,,	200 ,,	5 ,,	70 ,,
3	210 ,,	200 ,,	5 ,,	75 ,,
	520 ,,	200 ,,	3 ,,	55 ,,
4	400 ,,	200 ,,	5 ,,	65 ,,
	1.0 Mc/s	200 ,,	2 ,,	45 ,,
5	1.0 ,,	200 ,,	3 ,,	80 ,,
	2.5 ,,	200 ,,	2 ,,	50 ,,
6	2.7 ,,	100 ohms	3 ,,	66 ,,
	6.7 ,,	100 ,,	2 ,,	40 ,,
7	6.8 ,,	100 ,,	4 ,,	55 ,,
	16.5 ,,	100 ,,	3 ,,	30 ,,
8	14.5 ,,	100 ,,	5 ,,	35 ,,
	25.0 ,,	100 ,,	3 ,,	25 ,,

3. **I.F. Selectivity (Adjacent Channel Protection).**

Pass-band Switch.		*Bandwidth for attenuation as under*	
		—6 db.	*—40 db.*
I.F.—570 kc/s.	Wide	5.0 kc/s	
	Medium	4.0 ,,	
	Narrow	2.0 ,,	16 kc/s.
I.F.— 98 kc/s.	Wide	2.2 ,,	
	Medium	1.8 ,,	
	Narrow	1.5 ,,	8.0 kc/s.

4. **L.F. Response.**

With the pass-band switch set to " F " the two-stage note filter (thus introduced) passes a band of frequencies of approximately 100—150 c.p.s. for an attenuation of 6 db. Frequencies more than 200 c.p.s. from mid-band frequency are attenuated by at least 20 db.

With the filter switched out to the L.F. response varies according to the setting of the pass-band switch as shown on page 23, Fig. 1.

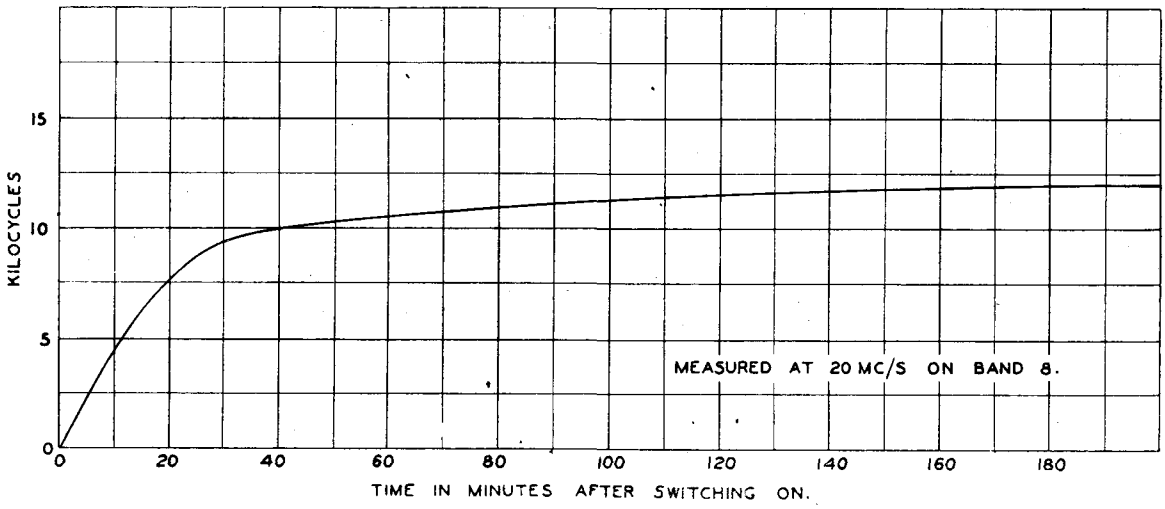

5. **Overall Fidelity.**

The overall response is shown on page 23, Figs. 2 and 3.

6. **Output and A.G.C.**

Input-output and A.G.C. characteristics are shown on page 23, Fig. 4.

7. **Thermal Drift.**

A typical curve of frequency drift (to a base of time after switching on) is shown above. This was measured at 20 Mc/s on Band 8.

It will be noted that after a preliminary warming period of 20 minutes, frequency does not shift more than ±5 kc/s. during the subsequent hour.

SECTION 5.

INSTALLATION.

Mounting.

Both the receiver and the supply unit call for no special mounting whatever when used for normal bench working. The receiver position should be selected so that access is given to the sockets on the left-hand side of the case and the power supply unit may be arranged in any position so that the multicore cable linking it to the receiver can be conveniently disposed.

When it is desired to secure the units to a table, e.g., for ship use or in vehicles, the two fixing straps provided with the receiver should first be fixed transversely to the underside of the receiver by the four screws and spacers supplied. The screws are O.B.A. counter-sunk, $\frac{3}{4}$-in. long. The spacers are $\frac{5}{16}$-in. thick. The equipment can then be screwed directly to the bench through the holes in the straps, the fixing centres forming the corners of a rectangle $17\frac{3}{4}$-in. wide by 8-in. back-to-front.

The supply unit is provided with straps welded to the base, giving fixing centres $9\frac{3}{4}$-in. back-to-front by $5\frac{3}{4}$-in. wide.

If the receiver is to be mounted on a steel shelf or other position where access to the underside is available, space may be saved by dispensing with the straps and securing the receiver by O.B.A. screws passing directly through the shelf into the tapped holes on the chassis. The $\frac{5}{16}$-in. spacers should be retained so that the domes on the base-plate of the receiver are clear of the shelf.

Mains Working.

The Type 889 Supply Unit contains the circuits for furnishing all supplies to the receiver from D.C. sources at 24 volts, 110 volts and 220 volts and from 230 volts 50 c.p.s. mains.

The table below shows the position of the connecting links to suit the various input supplies.

Supply.	*Switch Position.*	*Position of Links.*
230 volts A.C.	1	Connect 2 to 3 ,, 4 to 5 ,, 9 to 10 ,, 12 to 13
24 volts D.C.	1	Connect 1 to 2 and 9 ,, 4 to 7, 8 and 14
110 volts D.C.	2	Connect 1 to 2 ,, 4 to 15 ,, 6 to 7 and 14 ,, 9 to 10
220 volts D.C.	3	Connect 1 to 2 ,, 4 to 15 ,, 7 to 11 and 14 ,, 9 to 10

N.B. D.C. supplies with a nominal voltage rating of 110 *and* 220 *volts frequently have a mean value more nearly approaching* 100 *volts and* 200 *volts respectively. For mains having the lower value above quoted, it is desirable to connect pin* 4 *to pin* 5 *instead of to pin* 15.

It should be noted that the negative H.T. output lead from the unit is taken to earth via a link connection provided at the bottom of one of the sides of the chassis. In cases where it is desired to use the Type 889 Supply Unit, specially designed for use with the Type CR. 300 receiver, to feed other receivers in which the negative H.T. line is not earthed, this link must be removed.

It is important that all wiring between the supply unit and the receiver should be efficiently bonded to earth at the multi-way sockets. All wiring from the supply unit to the main power source should be carried out in screened wiring, which should also be efficiently bonded to earth at the input to the supply unit.

Battery Working.

The receiver may be fed directly from H.T. and L.T. batteries via its multi-way supply lead, connections to which are shown on page 39, Fig. 5. The L.T. battery of 24 volts must be capable of providing 0.95 A. and it is important to avoid undue voltage drop between battery and receiver. The H.T. supply required will be 60 mA. at 250 volts.

Wiring from battery to receiver should be carried out in screened cable which should be efficiently bonded to earth by the input socket on the receiver.

Aerial Input.

The receiver will give excellent results with a single wire aerial between 60 and 100 ft. long. Where local interference is high about 20 ft. maximum length of screened down lead may be employed without any precautions for terminating the aerial where it enters the feeder. This length of Uni-Radio 6 feeders will have a capacity of less than 300μμF, and the aerial capacity may be accordingly up to 400μμF without exceeding the total of 700μμF specified.

Outputs.

The extension connections for loudspeaker and telephone outputs are furnished via the multi-way socket, particulars being given on page 39, Fig. 5.

Desensitising.

In addition to the supply and extension output leads, the multi-way core provides a connection (pin 1) which may be taken to the back key contact on an associated transmitter. When the contact is isolated from earth additional bias is introduced on the amplifier stages, the amount of this bias depending upon the setting of the preset control at the top right of the panel. It has been recommended in the operating instructions that this should be normally left fully clockwise. Where its use is not desired in conjunction with the transmitter an additional safeguard is to take an external connection to earth from pin 1 on the multi-way supply socket.

SECTION 6.

MAINTENANCE AND SERVICING.

The following sub-sections cover servicing the receiver according to apparatus and facilities available. Apart from servicing for specific faults which may arise routine maintenance calls for little comment.

It cannot be too strongly stated that random adjustments to trimmer condenser, etc., should never be undertaken. Such adjustments should only be touched by staff having the necessary experience after reading the servicing instructions below.

Always keep the lid of the receiver closed to avoid dust. Avoid harsh treatment of the aerial and supply sockets, e.g., do not drop them on the ground at the end of their leads. Occasional lubrication of the click register and wave-change mechanisms with a light machine oil of good quality is desirable ; the actual switch wafers and contacts must not be lubricated under any circumstances.

When the bottom of the receiver is removed for inspection, check that the grub screws pinning the various switch shafts are tight.

Do not touch the main tuning condenser except when it is absolutely essential in order to remove dust or other deposit on the plates, and then use nothing harsher than a feather or pipe cleaner inserted gently between the plates. Tighten the grub screws holding the operating handles on to their spindles if they work loose under constant use, rather than let them tend to scratch a track on the spindle through slipping, and do not try to force the control knobs beyond their obvious " stop " position.

Always switch off before servicing the receiver or power supply unit internally.

The receiver is safe when supplies are switched off at the supply unit. The supply unit is only completely safe when isolated from the mains.

EMERGENCY SERVICING.

The following notes are intended to facilitate fuse replacements, valve replacements, servicing cord drives, etc. Full circuit checks and re-alignment instructions are detailed later.

Fuse Replacements.

The supply unit is fitted with a fuse of the " Slydlok " type on the front panel, and this should be inspected in the case of failure of supplies to the receiver. On dispatch units are fitted with 2 Amp fuse wire. For 24 volt working, .5 Amp wire should be fitted. Gauges of fuse wire and copper wire for emergency use are as under :

Supply Volts.	*Fusing Current.*	*Wire Gauge.* *Lead-Tin.*	*Copper.*
230 volts A.C. 220 volts D.C. 110 volts D.C.	2.0 amps.	No. 29 S.W.G.	No. 43 S.W.G.
24 volts D.C.	5.0 amps.	No. 24 S.W.G.	No. 38 S.W.G.

Valve Replacements.

Failure due to valve filaments may be visible on inspection of the valves in the receiver. The series-parallel wiring of the valves causes more than one valve to become out of circuit in case of filament failure, and all valves in a series run must be tested, i.e., Series V1, V2, V3 and V8, and series V4, V5, V6 and V7.

If valve filaments are correct and loss of emission is suspected, substitution tests may be made or feeds should be checked by an Avometer—see page 39, Fig. 8. Valve types and positions are shown on page 39, Fig. 6.

Vibrator Unit Replacements.

Do not carry out replacements of vibrators or other items in the supply unit without isolating the latter from the supply source.

The vibrator unit is a working part having a finite life and must be replaced on failure. By removing two cheesehead screws and withdrawing the supply unit from its case two plug-in vibrator units will be found at the rear of the upper deck. The one farther from the front panel is the one in circuit, and may be unplugged and replaced by the spare. If the power supply unit is *not* isolated from the supply, live terminals may be touched in grasping these units.

Electrolytic Condenser Replacements.

The electrolytic condenser in the supply unit, also visible on withdrawing the latter from its case, is of the plug-in type. It is just in front of the spare vibrator, and may be withdrawn after removing the retaining cover plate.

Replacing the Calibration Drum Drive Cord.

Tools Required :

Pair of long nosed pliers.
Small screwdriver.
Short length of approx. 20 S.W.G. wire.

All directions (i.e., left hand and right hand) are given with respect to the receiver viewed from the front. It is advisable to study Drg. WZ.1922, page 41, before commencing operations. The operation is best carried out on a table, thus giving all-round access to the receiver. Then take off the Calibrated Range drum by removing the left hand bracket and cheek, and pulling the cylinder out of the right hand cheek. Replace the left hand bracket, thus supporting the spindle. The receiver should be laid on its right hand side (loudspeaker nearest bench) with the underside of the chassis facing the operator. Take 6 feet of cord, bring the ends together and fold double. Pass the loop through the eyelet G on the cylinder cheek and anchor it with a " figure-of-8 " knot (Figs. 1 and 2).

It is now advisable to fix a short length of wire (say 6 in.) to each of the two ends of the cord in order to facilitate threading the cord in the following operations.

Turn the Band switch to Band 4. The cylinder cheek should then be rotated so that the eyelet hole G takes up a " 10 o'clock " position, when viewed from the left hand side of the receiver (Fig. 2). The right hand cord (Fig. 3) is taken round the cylinder cheek to pulley A. The left hand cord (Fig. 3) is taken one complete revolution in the opposite direction to pulley C, and temporarily attach to chassis, holding the right hand cord in the hand so as to keep the eyelet hole G at its 10 o'clock position.

Proceed with the right hand cord to the top of the switch pulley via pulley B (nearest front of receiver, Fig. 3) and from top of switch pulley take the cord 1½ revolutions around to eyelet H, ensuring first that no cords cross, then remove the wire from the end of the cord, pass through H and anchor temporarily. (Detach the left hand cord, and pass it to the bottom of the switch pulley via pulley D). Wind one complete revolution around the pulley to eyelet hole H, remove the wire, and pass through. Take both cords together, ensure that no cords are crossed or off the pulleys, remove spring J, make a loop with either one of the cords through the eyelet, and move the spring along the cord until it is within ⅛-in. of the inside of eyelet H. Knot both cords together, and by means of the pliers replace the spring to hole K.

Replace the calibrated range drum, and ascertain that the cord system is working properly before cutting off the spare ends.

Should the ranges not come exactly opposite the window, the grub screws on the switch pulley can be loosened and the system adjusted. It will be found easiest to turn to Band 8 for this purpose.

Replacing the Calibration Pointer Drive Cord.

1. Set 0—25 Logging Scale at 22.
2. Remove knobs, front panel and logging scale escutcheon plate.
3. Remove outer logging scale.
4. Release pointer from cord and remove cord.
5. Thread new cord, which should be 44-in. long, through pointer slider and pass the ends round the drum, the right hand cord clockwise and the left hand cord counter-clockwise. Tuck the cords through the hole in the periphery of the drum. There should now be approximately one and a third turns on the drum.
6. Thread ends of cord through loop of spring and secure with a large knot 1-in. from the end.
7. Pull cord through hole in drum, thus extending the spring and ease over the small pulleys at each end of the pointer carriage-way.
8. Replace logging scale and escutcheon plate.
9. Fix pointer to cord, so that pointer is at mid-scale when logging scale is at 12.5.

10. Before finally clamping pointer to cord, check the setting by tuning in a station whose frequency is accurately known ; alternatively tune in the fundamental or second harmonic of the crystal calibrator.
11. Replace panel and knobs.

CIRCUIT CHECKS (AVOMETER).

In the event of a receiver failure not due to valves, fuses, etc., endeavour to narrow down the possible fault by a logical sequence of tests, e.g., a failure observable on one of the frequency bands only would exonerate the I.F. and L.F. circuits, a failure on the narrowest position of the pass-band switch would be probably due to the L.F. filter, etc., etc.

If a fault can be narrowed down it can very often be traced by the use of an Avometer only and the following tables give circuit checks.

(*a*) *From Input Power Plug.*—See page 39, Fig. 5.

Resistances between the pins should be as given in the table below.

For this test all valves and lamps should be in position, the receiver should be switched on (but power input plug removed) and all controls rotated to their fully clockwise position (including " desensitising " control).

Test Points.	*Resistance Value.*
Pin 1 to Earth (Pin 2)	0—20 ohms
,, 2 ,,	0 ,,
,, 3 ,,	25,000 ,,
,, 4 ,,	2.0 ,,
,, 5 ,,	300 ,,
,, 6 ,,	Infinite
,, 6 to Pin 7	5.0 ohms
,, 3 to Pin 6	Infinite

(*b*) *Valve Holder Resistances.*

For this test the conditions should be as (*a*) above. Values should be correct to within ±20%.

Test Point.	*V1*	*V2*	*V3*	*V4*	*V5*	*V6*	*V7*	*V8*
H.T. Positive to Valve Pin 3	22,500	2,700	2,700	2,700	57,500	267,500	800	47,000
,, ,, ,, ,, ,, 4	47,000	47,000	29,000	68,000	500,000	440,500	5,200	47,000
,, ,, ,, ,, ,, 5	93,000	245,000	26,000	25,500	1,025,000	25,000	25,000	25,000
,, ,, ,, ,, ,, Earth	25,000	25,000	25,000	25,000	25,000	25,000	25,000	25,000
Earth to Top Cap	1,700,000	1,000,000	2,000,000	1.6	500,000	470,000	—	150,000
,, ,, Valve Pin 5	68,000	220,400	750	400	1,000,000	0	600	0
,, ,, ,, ,, 8 (H.F. gain min.)	10,500	390	10,900	390	2,900	3.0	1,000	3
,, ,, ,, ,, 8 (H.F. gain max.)	500	400	800	400	2,900	3.0	1,000	3
L.T. Positive to Pin 2	6.3	6.7	4.0	6.6	5.0	6.6	2.2	6.3
,, Negative to Pin 2	6.3	4.0	6.7	5.9	.1	5.9	5.9	6.3

Voltage Tests.

To be measured with Operational Switch at " CALIBRATE," Band switch on Band 8, and gain controls at maximum, and desensitising control set fully clockwise.

The following figures should be obtainable when the receiver is fed from its Supply Unit Type 889.

Test Points.	*Voltage or Current.*
H.T. and Earth	250 volts ± 6%
Pin 4 of V1 and Earth	80 ,, ±20%
,, ,, ,, V3 ,, ,, ...	90 ,, ±20%
Across Pins 6 and 7 of Operational Switch with latter set to " OFF ".. ..	56 mA ±20%
Across Power Switch S15, with latter switched off	0.95 amps ±10%

Valve Feeds.

Feed metering resistances for Valves 1 and 2 are placed on the right of the ten-way tag strip feeding the H.F. plate, these are resistances R57, 58 and 59, in sequence from left to right (see page 39, Fig. 8).

Corresponding points for the I.F. and L.F. feeds are provided on the distribution board on the I.F. sub-chassis. These are grouped in logical order starting with the shunt (R60) for the first I.F. valve nearest the chassis plate.

The following should be obtained at maximum gain and operational switch in the " CALIBRATE " position. Band Switch at " 8 " and Pass-band at " F."

Valve.	*Test Points.*	*Current.*
V1	H.T. ± and R57	2.0 mA. ± 20% (CR. 300/1, ARTH.2) or 4.0 mA. ± 20% (CR. 300/2, KTW 61)
V2 (triode)	,, ,, R58	2.6 mA. ± 20%
V2 (hexode)	,, ,, R59	1.2 ,, ,,
V3	R60	4.0 ,, ,,
V4	R61	6.0 ,, ,,
V5	R62.	1.5 ,, ,,
V6	H.T + and R63	0.9 ,, ,,
V7	,, ,, R64	20.0 ,, ,,

Note : Reduction of gain control should decrease feeds of valves V1 and V3.

RECEIVER ALIGNMENT.

Low Frequency Amplifier Tests.

(*a*) *Equipment Required :*

1. A tone generator fitted with an attenuator such that output voltage can be varied.
2. Output meter matched to 5,000 ohms capable of reading levels of 0.1 mW. up to 10 mW.

(*b*) *Conditions of Test :*

1. Set A.G.C. switch to " OFF " and all receiver controls to their *full clockwise* position except that pass-band switch should be set to " N."
2. Signal from tone source to be injected via a 0.1 mfd. condenser to grids of V5 and V7 as detailed below.

(*c*) *General Checking.*

1. Check zero frequency setting of Tone Generator.
2. Injecting at grids of V5 and V7 in turn the following inputs should be required for an output of 10 mW. (Meter set for 5,000 ohm impedance).

Tone Frequency.	*Input at V5 (volts).*	*Input at V7 (volts).*
400 c.p.s.	0.16 — 0.2	0.9 — 1.2
1,000 ,,	0.12 — 0.16	0.7 — 1.0

3. If the figures for V7 are unsatisfactory, the output transformer can be checked by injecting the input on the Tag No. 1 of the output transformer. The signal level required should be 30 volts at a frequency of 400 c.p.s.
4. With the pass-band switch at " F " and input injected on V5 grid a sharp peak in the output should be found at approximately 950 c.p.s. as the input frequency is swept through this region.
   For 10 mW. the input level at this frequency should be 0.1—0.2 volts.

(*d*) *L.F. Filter Response.*

This may be checked as follows :—

(A) Adjust frequency to give maximum output, and reduce level so that the latter is 10 mW.

(B) Detune above this setting until the output fails by 6 db and note the new frequency setting (f1). Repeat by detuning in the opposite direction to a new frequency (f2). The difference between f1 and f2 should not exceed 150 c.p.s.

(C) Repeat as in (B) but for a fall in output of 20 db. In this case the frequency difference should not exceed 450 c.p.s.

(*e*) *Adjustment of L.F. Filter.*

If the above tests do not give a satisfactory response the tuning of the L.F. filter can be checked as follows :—

1. Set the tone generator to 950 c.p.s., inject at grid of V5 and adjust level to give approximately 10 mW. output with pass-band switch at " F."
2. Clip 100,000 ohm resistance across variable condenser C93 on top of 1st section of the filter (on left viewed from front panel) and tune the other condenser C94 for maximum output.
3. Repeat but with 100,000 ohms across C94, adjusting C93 for maximum.
4. Repeat 2 and 3 twice and then remove resistor.

Intermediate Frequency Tests.

(*a*) *Equipment Required.*

1. A signal generator capable of tuning to 98 kc/s and 570 kc/s at levels variable from 15μV. to 5 mV.
2. Output meter matched at 5,000 ohms reading up to 10 mW.
3. Isolating condenser of .01 mfd. or larger.

(*b*) *Conditions of Test.*

Operational switch at " PHONE."
H.F. and L.F. gain at maximum.
Pass-band switch at " N."
Input to be 50% modulated at 400 c.p.s. injected via a .01 mfd. condenser.
Output to be 10 mW into 5,000 ohms.

(*c*) *Re-alignment Instructions.*

Note the adjustments for the iron cored inductances in use with the 570 kc/s I.F. are made through the top of the I.F. cans, while the 98 kc/s circuits are adjusted from below the chassis. Refer to Figs. 6 and 7, page 39, for the lay-out sequence of the I.F. units.

570 *kc/s Alignment.*

Set Band switch to Band 2, 3, 5, 6, 7 or 8.
,, Signal generator to 570 kc/s.

Inject signal on to V2 grid and check output level required against that given in table below. If unsatisfactory the alignment can be checked as follows :—

Injection Point.	*Procedure.*	*Approx. level Required.*
V4 grid	Adjust I.F. units 5 and 4 in that order.	8.0 mV.
V3 ,,	Adjust I.F. units 4 and 3 in that order.	400μV.
V2 ,,	Adjust I.F. units 3 and 2 in that order.	40μV.

Beat Frequency Oscillator Adjustment.

With signal generator at V2 as above, i.e., 570 kc/s

1. Remove modulation from signal generator.
2. Turn operational switch to " C.W."
3. Adjust slug in top of I.F. Unit No. 6 until a beat frequency of approximately 1,000 c.p.s. is heard.
4. Shift input signal to exactly 571 kc/s.
5. Retrim slug in Unit No. 6 to give zero beat.

The location of the inductances (and corresponding capacities) for each band is made clear by Fig. 7, page 39.

The correct check points are tabulated below.

Band.	*Correct Frequency.*	
	Logging Scale, at 23.	*Logging Scale, at* 1.
1	18 kc/s	84.4 kc/s
2	84.4 ,,	208 ,,
3	208 ,,	533 ,,
4	392 ,,	1.0 Mc/s
5	1.0 Mc/s	2.57 ,,
6	2.57 ,,	6.74 ,,
7	6.74 ,,	16.75 ,,
8	14.3 ,,	25.15 ,,

On bands 1—7 the oscillator frequency is above that of the incoming signal by the frequency of the intermediate amplifier, while on band 8 it is below by that amount.

(*d*) *Signal Frequency Circuit Alignment.*

Having checked the frequency settings of the 1st oscillator, the procedure for lining up the signal frequency circuits is precisely similar, inductances being adjusted at the lower, and the capacity trimmers at the higher, frequency limit.

In this case the signal source should be injected at the aerial terminal via the appropriate " dummy aerial " (see below).

Bands.	*Correct Dummy Aerial.*
1 — 4	200μμF
5 — 8	100 ohms

On bands 7 and 8 a modulated signal should be used for preference.

*N.B.*1. *On band* 8 *it may be found that, as the H.F. anode circuit is adjusted, slight pulling of the* 1*st oscillator takes place ; this can be counteracted by rocking the main tuning control slightly to restore maximum output.*

*N.B.*2. *If using the scale check oscillator for lining up purposes, the appropriate dummy aerial should be connected between aerial and earth.*

(*e*) *Signal Frequency Gain Check.*

In the process of alignment the gains may be checked to the following table.

Conditions.

Output set to 10 mW. into 5,000 ohms.
L.F. gain at maximum.
R.F. gain to maximum.
Operational switch at " C.W."
Pass-band Switch at " N."
Tuning control to high frequency end of scale (approximately).

Procedure.

Check input levels required to the following table.

Band.	*Frequency.*	*Input* (μV). *V*2 *Grid.*	*V*1 *Grid.*	*Aerial.*	*Dummy Aerial.*
1	80 kc/s	25	10	30	200μμF
2	200 ,,	,,	3.0	1.0	
3	530 ,,	,,	3.0	1.0	
4	1.0 Mc/s	,,	3.0	1.0	
6	2.5 ,,	,,	3.0	1.0	100 ohms
6	6.5 ,,	,,	3.0	1.0	
7	16.5 ,,	,,	4.0	2.0	
8	25.0 ,,	,,	5.0	2.0	

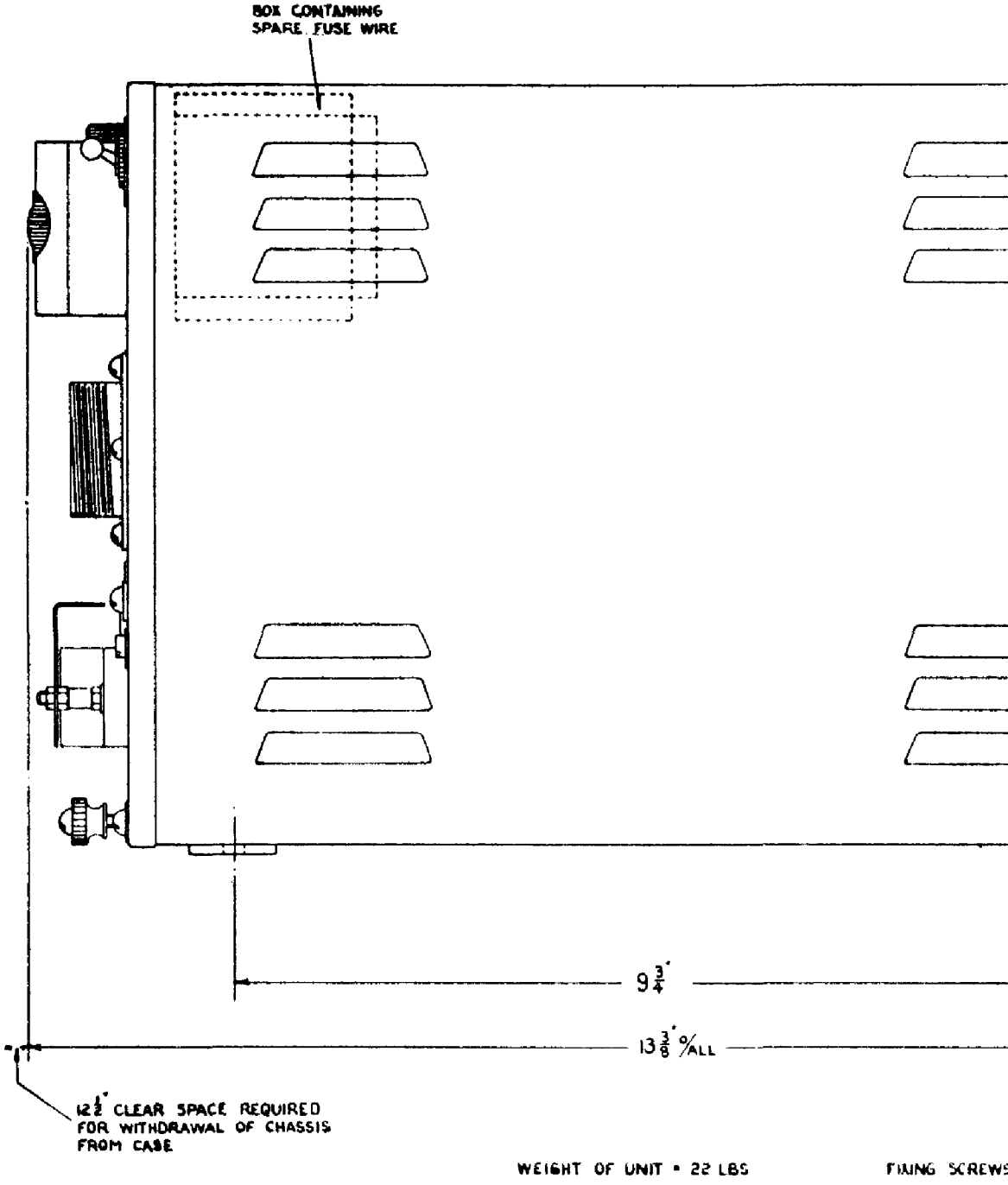

DIMENSIONS OF SU

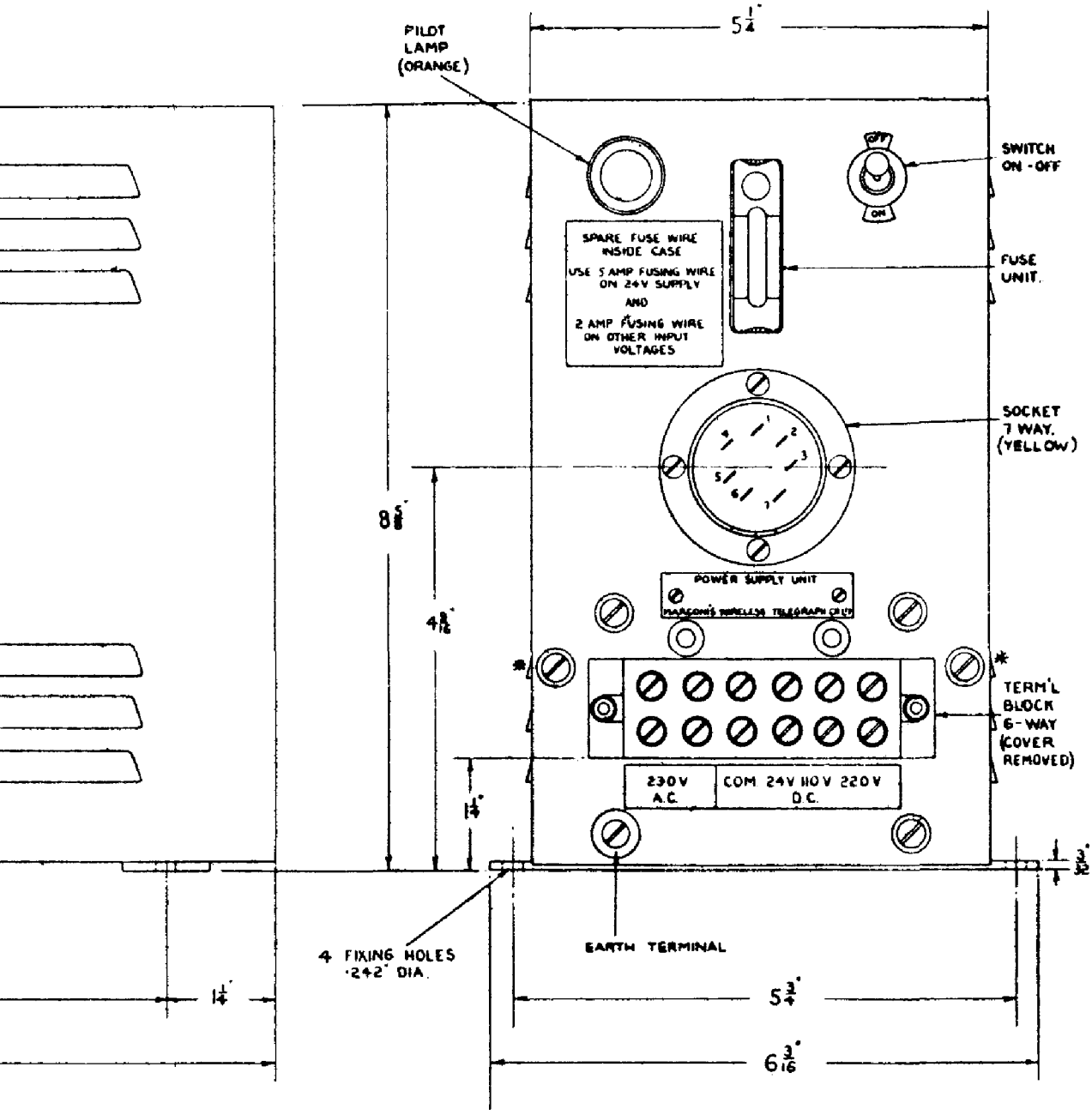

SCREWS NOT INCLUDED WITH UNIT.

* 2-2BA CH HD SCREWS FIXING CHASSIS IN CASE

WZ. 1782

OF SUPPLY UNIT TYPE 889.

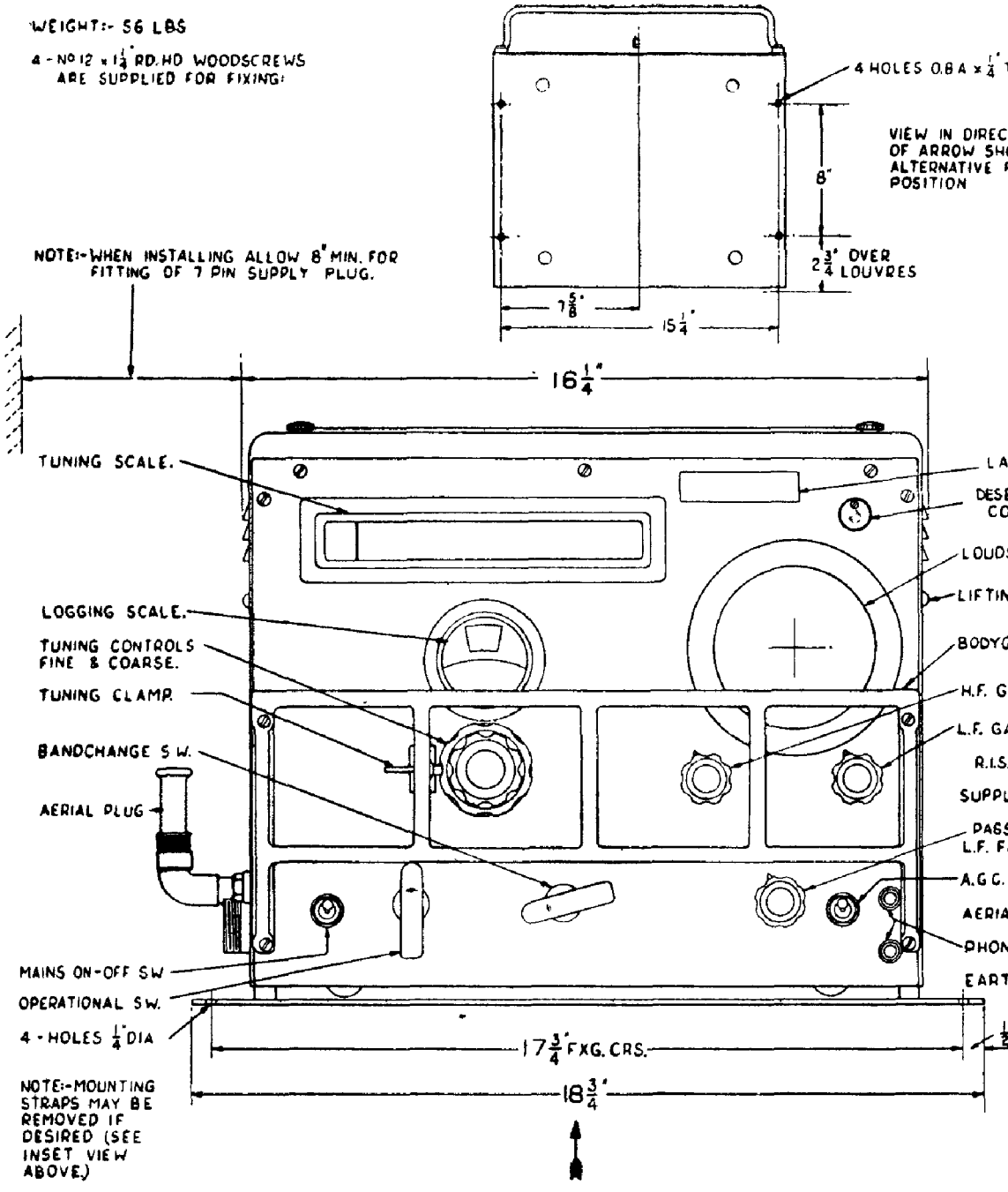

DIMENSIONS OF RECEIVER TYPES C

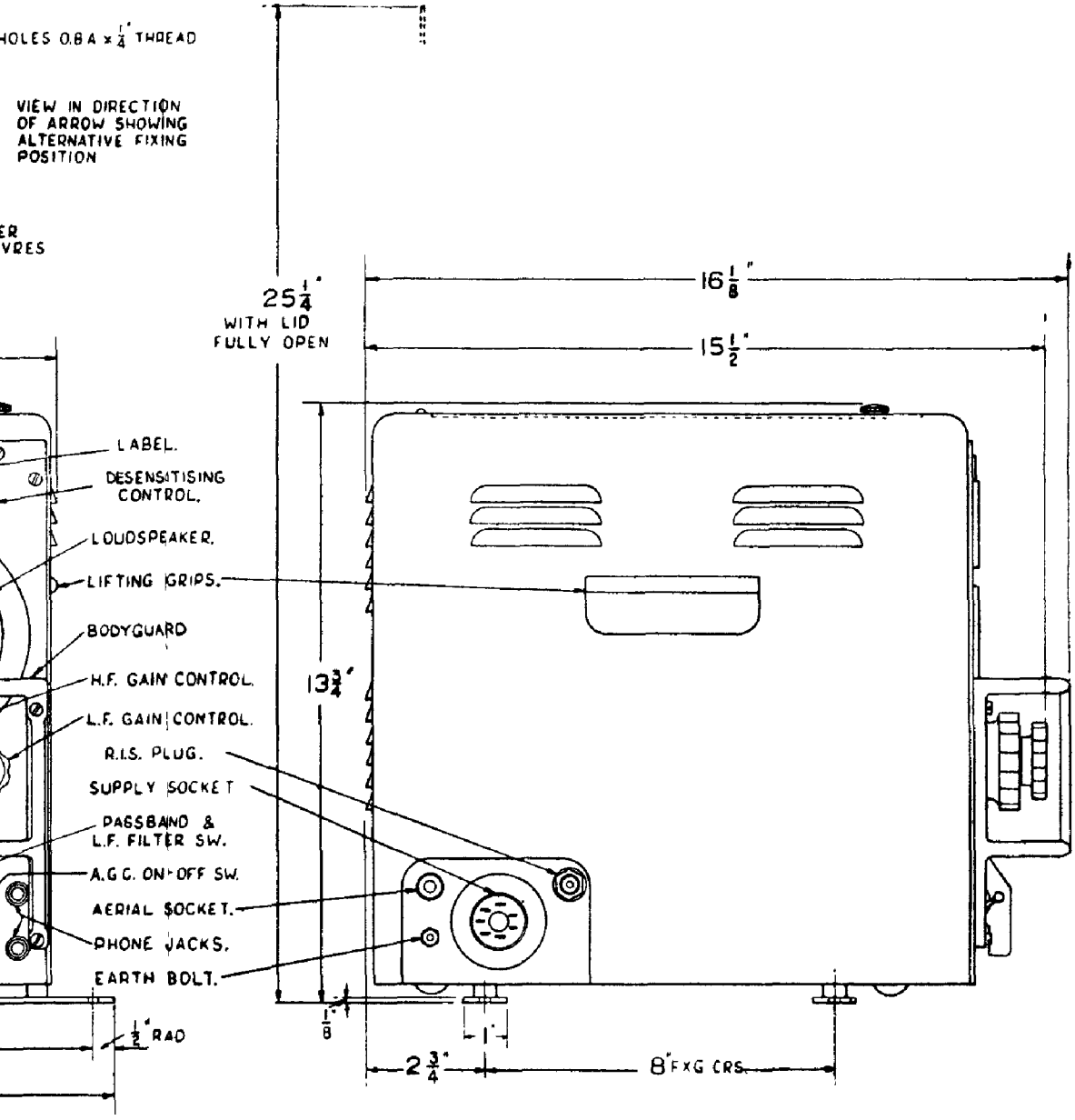

WZ. 1758

TYPES CR 300/1 AND CR. 300/2

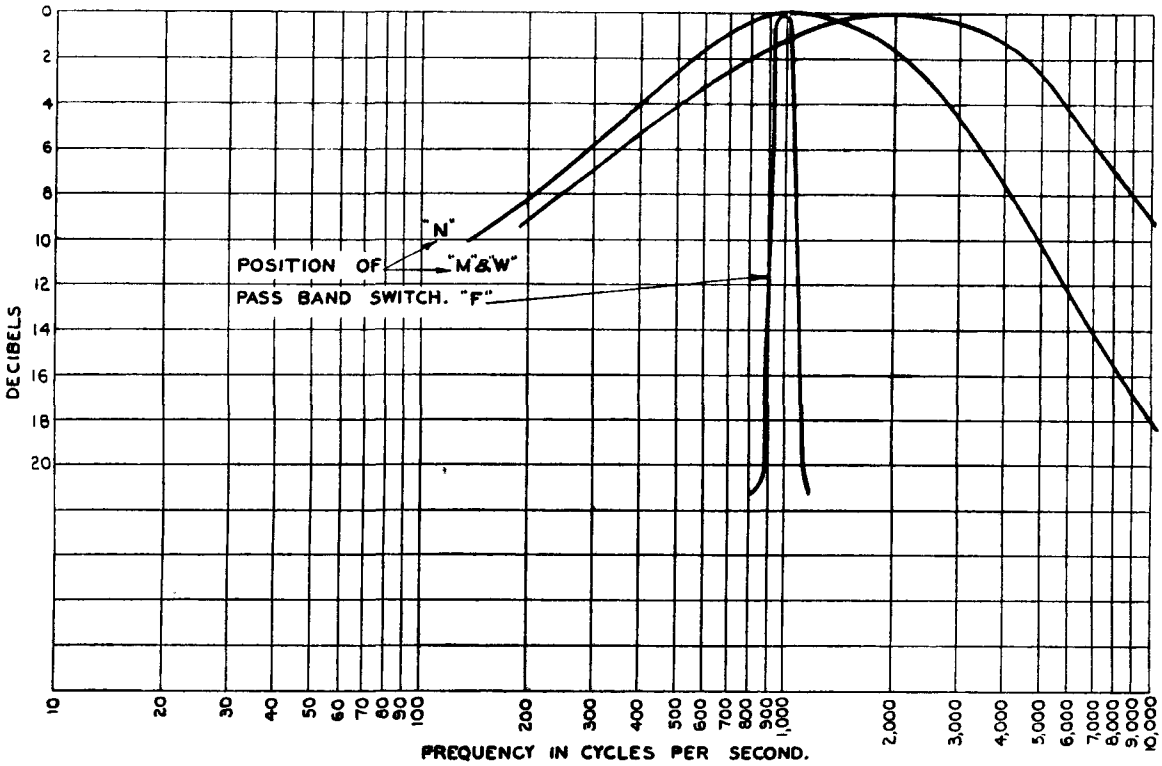

Fig. 1. Low Frequency Response Curves.

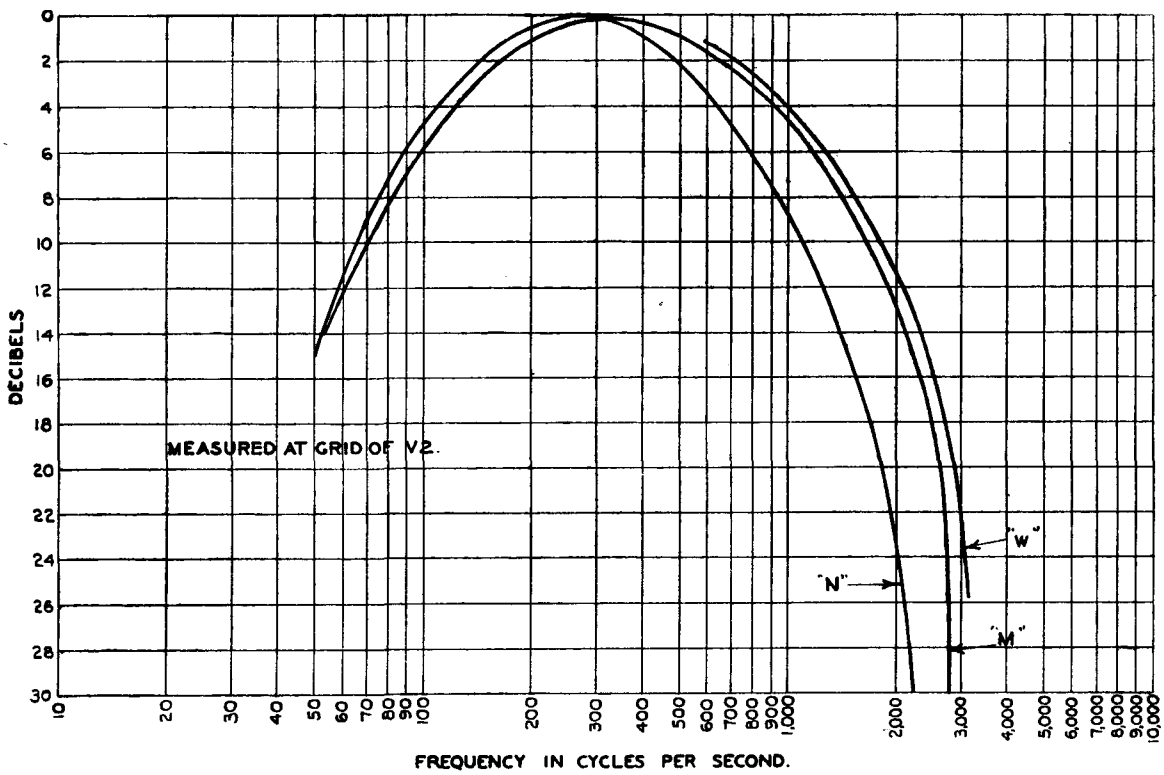

Fig. 2. Overall Response Curves (98 kc/s).

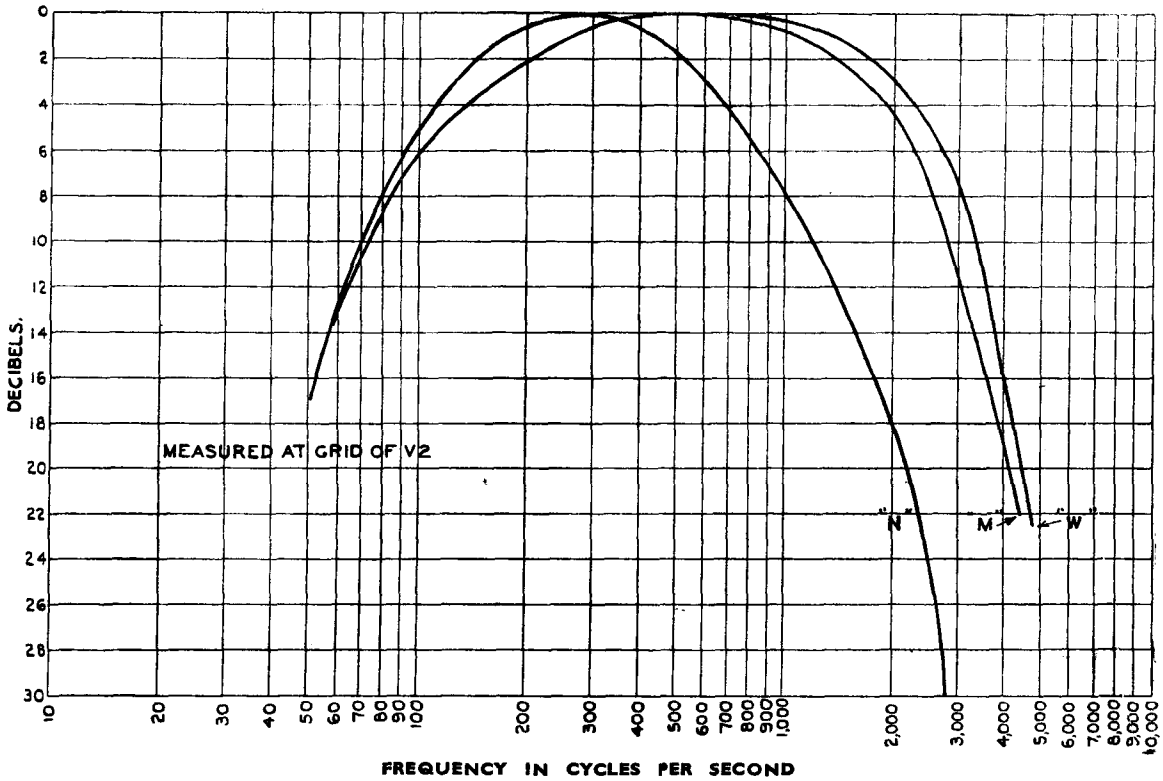

Fig. 3. Overall Response Curves (570 kc/s).

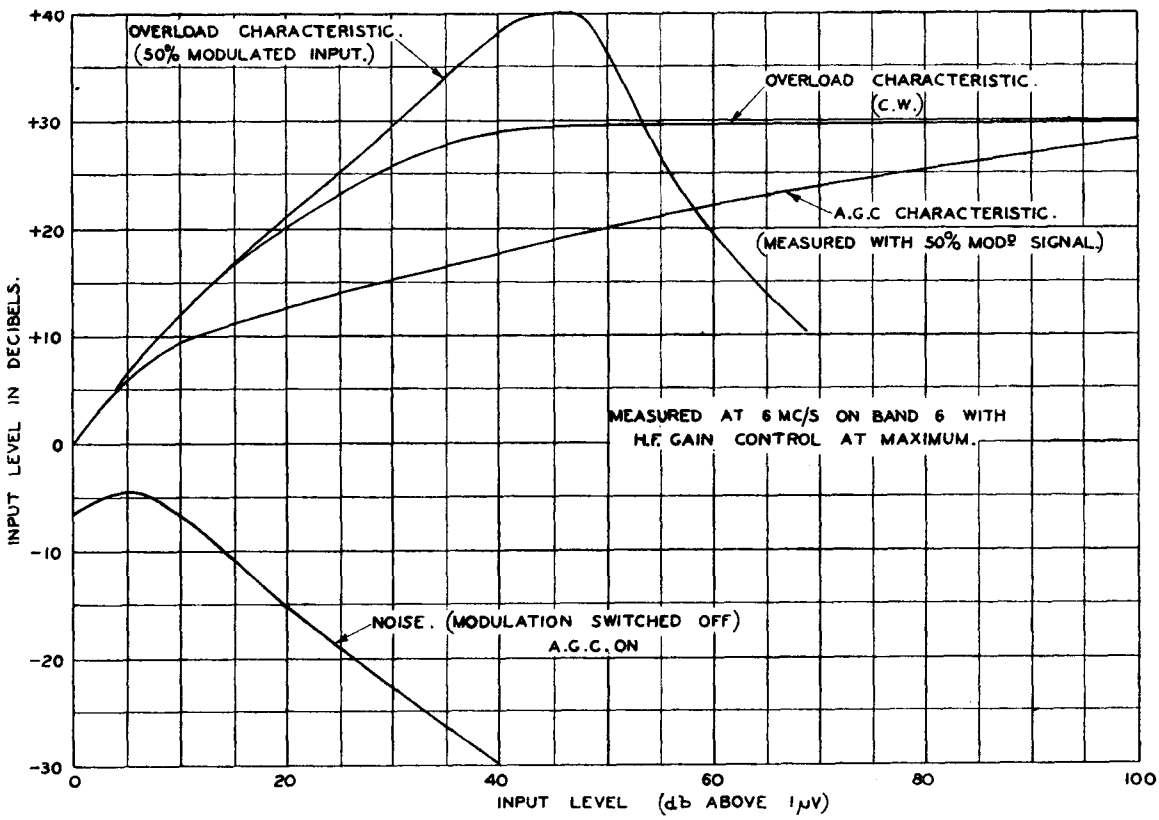

Fig. 4. Automatic Gain Control and Overload Curves.

COMPONENT LIST FOR RECEIVER.

TYPES CR. 300/1 AND CR. 300/2.

Note. It is essential, when ordering spares for this Receiver, to quote the Type reference shown on the Receiver (Type CR. 300/1 or 2), Serial No. of Unit, the reference number of the component (e.g., C3), and the drawing number of the component, thus :—

Type CR. 300/1, MC....., C3, W.IS. 2708, Sh. 1, Ref. 2.

The component part references in column 1 will be found on Drg. WE/W. 6890, Sh. 1, page 33.

Ref.	Section of Diagram.	Description.	Nominal Value.	Drawing No.	Adm. Ref.
SUB-ASSEMBLIES.					
Aerial Assembly	A	Includes Components Marked (AA).		W.6887 Sh. 1, Ed. A.	M661
H.F. Assembly	B	Includes Components Marked (HA).		W.6888 Sh. 1, Ed. A.	M662
Oscillator Assembly	C	Includes Components Marked (OA).		W.6889 Sh. 1, Ed. A.	M663
Oscillator Calibrator	F	500 kc/s. (CR. 300/1) 690 kc/s. (CR. 300/2) Includes Components Marked (OC).		W.6894/C Sh. 1, Ed. B.	M670
I.F.1	C	Coil Unit. Includes L25 and 26, C39 and 40		W.6972/C Sh. 1, Ed. A.	M664
I.F.2	D	Coil Unit ,, L27 and 28, C62 and 63		W.6972/C Sh. 1, Ed. B.	M665
I.F.3	D	Coil Unit. ,, L29 and 30, C65 and 66		W.6972/C Sh. 1, Ed. C.	M666
I.F.4	E	Coil Unit. ,, L31 and 32, C77 and 78		W.6972/C Sh. 1, Ed. D.	M667
I.F.5	E	Coil Unit. ,, L33 and 34, C79 and 80		W.6972/C Sh. 1, Ed. E.	M668
I.F.6	E	Coil Unit. ,, L35 and 36, C81 and 82		W.6972/C Sh. 1, Ed. F.	M669

The components used in the above sub-assemblies are specified in the following lists, but when any of these specified components are required, the complete sub-assembly in which they are used **must** be ordered.

CONDENSERS.					
C1	A	Condenser.	0.01μF.	WIS.1565 Sh. 2.	M708
C2	A	Condenser.	0.007μF.	As C1.	M707
C3	A	Condenser, Triple with C20 and C106.	0.1μF.	WIS.2708 Sh. 1, Ref. 2.	M710
C4	A	Condenser (AA).	500μμF.		
C5	A	Condenser (AA).	500μμF.		
C6	A	Condenser (AA).	50μμF.		
C7	A	Condenser (AA).	500μμF.		
C8	A	Condenser (AA).	300μμF.		
C9	A	Condenser, Trimmer (AA).	3—30μμF.		
C10	A	Condenser, Trimmer (AA).	As C9.		
C11	A	Condenser, Trimmer (AA).	As C9.		
C12	A	Condenser, Trimmer (AA).	As C9.		
C13	A	Condenser, Trimmer (AA).	As C9.		
C14	A	Condenser, Trimmer (AA).	As C9.		
C15	A	Condenser, Trimmer (AA).	As C9.		
C16	A	Condenser (AA).	10μμF.		
C17	A	Condenser, Tuning.	437μμF Sweep with C36 and C60.	W.7218 Sh. 1, Ed. A.	M660
C18	A	Condenser (AA).	0.01μF.		
C19	A	Condenser.	0.01μF.	WIS.1609.	
C20	A	Condenser, Triple with C3 and C106.	0.1μF.	As C3.	M710

Ref.	Section of Diagram.	Description.	Nominal Value.	Drawing No.	Adm. Ref.
C21	B	Condenser (HA).	0.01μF.		
C22	B	Condenser, Triple with C37 and C38.	0.1μF.	WIS.2708 Sh. 1, Ref. 2.	M710
C23	B	Condenser (HA).	30μμF.		
C24	B	Condenser (HA).	300μμF.		
C25	B	Condenser (HA).	As C24.		
C26	B	Condenser (HA).	700μμF.		
C27	B	Condenser (HA).	500μμF.		
C28	B	Condenser (HA).	5μμF.		
C29	B	Condenser, Trimmer (HA).	3—30μμF.		
C30	B	Condenser, Trimmer (HA).	As C29.		
C31	B	Condenser, Trimmer (HA).	As C29.		
C32	B	Condenser, Trimmer (HA).	As C29.		
C33	B	Condenser, Trimmer (HA).	As C29.		
C34	B	Condenser, Trimmer (HA).	As C29.		
C35	B	Condenser, Trimmer (HA).	As C29.		
C36	B	Condenser, Tuning.	437μμF Sweep with C17 and C60.	W.7218 Sh. 1, Ed. A.	M660
C37	B	Condenser, Triple with C22 and C38.	As C22.	As C22.	M710
C38	C	Condenser, Triple with C22 and C37.	As C22.	As C22.	M710
C39	C	Condenser for I.F.1.	500μμF.		
C40	C	Condenser for I.F.1.	150μμF.		
C41	D	Condenser, Trimmer.	3—30μF.	WIS.2848 Sh. 1, Ref. 1.	
C42	C	Condenser (OA).	300μμF.		
C43	C	Condenser.	100μμF.	WIS.1784.	
C44	C	Condenser (OA).	180μμF.		
C45	C	Condenser (OA).	71μμF.		
C46	C	Condenser (OA).	160.5μμF.		
C47	C	Condenser (OA).	1,370μμF.		
C48	C	Condenser (OA).	690μμF.		
C49	C	Condenser (OA).	1,650μμF.		
C50	C	Condenser (OA).	2,570μμF.		
C51	C	Condenser, Trimmer (OA).	As C29.		
C52	C	Condenser, Trimmer (OA).	As C29.		
C53	C	Condenser, Trimmer (OA).	As C29.		
C54	C	Condenser, Trimmer (OA).	As C29.		
C55	C	Condenser, Trimmer (OA).	As C29.		
C56	C	Condenser, Trimmer (OA).	As C29.		
C57	C	Condenser, Trimmer (OA).	As C29.		
C58	C	Condenser, Trimmer (OA).	As C29.		
C59	C	Condenser, Trimmer.	2—8μμF.	WIS.2848 Sh. 1, Ref. 2.	
C60	C	Condenser, Tuning.	437μμF Sweep with C17 and C36.	As C36.	M660
C61	C	Condenser (OA).	0.01μF.		
C62	D	Condenser for I.F.2.	500μμF.		
C63	D	Condenser for I.F.2.	150μμF.		
C64	D	Condenser, Triple with C70 and C97.	As C22.	As C22.	M710
C65	D	Condenser for I.F.3.	500μμF.		
C66	D	Condenser for I.F.3.	150μμF.		
C67	D	Condenser.	100μμF.	WIS.2442.	M709
C68	D	Condenser, Triple with C69 and C107.	As C22.	As C22.	M710
C69	D	Condenser, Triple with C68 and C107.	As C22.	As C22.	M710
C70	D	Condenser, Triple with C64 and C97.	As C22.	As C22.	M710
C71	D	Condenser, Triple with C72 and C76.	0.1μF.	WIS.2708 Sh. 1, Ref. 2.	M710
C72	D	Condenser, Triple with C71 and C76.	As C71.	As C71.	M710

Ref.	Section of Diagram.	Description.	Nominal Value.	Drawing No.	Adm. Ref.
C73	E	Condenser.	5μμF.	WIS.1784.	
C74	E	Condenser, Triple with C96 and C105.	As C71.	As C71.	M710
C75	E	Condenser, Triple with C83 and C85.	As C71.	As C71.	M710
C76	E	Condenser, Triple with C71 and C72.	As C71.	As C71.	M710
C77	E	Condenser for I.F.4.	500μμF.		
C78	E	Condenser for I.F.4.	150μμF.		
C79	E	Condenser for I.F.5.	500μμF.		
C80	E	Condenser for I.F.5.	150μμF.		
C81	E	Condenser for I.F.6.	500μμF.		
C82	E	Condenser for I.F.6.	150μμF.		
C83	F	Condenser, Triple with C75 and C85.	As C71.	As C71.	M710
C84	E	Condenser.	100μμF.	WIS.2442.	M709
C85	E	Condenser, Triple with C75 and C83.	As C71.	As C71.	M710
C86	E	Condenser.	0.01μF.	WIS.1565 Sh. 2.	M708
C87	E	Condenser.	500μμF.	As C84.	
C88	E	Condenser.	As C84.	As C84.	M709
C89	E	Condenser.	As C84.	As C84.	M709
C91	E	Condenser.	0.01μF.	As C86.	M708
C92	E	Condenser for L.F.1.	3,100μμF.	WIS.1565 Sh. 1, Ref. 22.	
C93	E	Condenser, Trimmer, for L.F.1.	1,450—2,000μμF.	WIS.1588 Ref. 7.	
C94	E	Condenser for L.F.1.	As C93.	As C93.	
C95	E	Condenser for L.F.1.	As C92.	As C92.	
C96	E	Condenser, Triple with C74 and C105.	As C71.	As C71.	M710
C97	E	Condenser, Triple with C64 and C70.	As C71.	As C71.	M710
C98	F	Condenser (OC).	0.005μF.		
C99	F	Condenser (OC).	500μμF.		
C100	E	Condenser.	500μμF.	As C84.	
C101	A	Condenser (AA).	50μμF.		
C102	F	Condenser.	0.005μF.	WIS.2970 Sh. 1, Ref. 15.	M706
C103	F	Condenser, Electrolytic.	25μF.	WIS.3178/C Sh. 1, Ref. 3.	M711
C104	F	Condenser.	1μF.	WIS.2838 Sh. 1, Ref. 4.	M712
C105	F	Condenser, Triple with C74 and C96.	As C71.	As C71.	M710
C106	F	Condenser, Triple with C3 and C20.	As C71.	As C71.	M710
C107	F	Condenser, Triple with C68 and C69.	As C71.	As C71.	M710
C110	A	Condenser (AA).	2μμF.		
C111	A	Condenser (AA).	2μμF.		
C112	A	Condenser (AA).	30μμF.		
C113	B	Condenser (HA).	20μμF.		
C114	C	Condenser, Temp. Compensator.		W.6893/C Sh. 1, Ed. A.	
C115	C	Condenser (OA).	30μμF.		
C116	C	Condenser (OA).	30μμF.		
C119	F	Condenser.	0.01μF.	WIS.1609.	
C120	F	Condenser.	0.01μF.	As C119.	
JACKS.					
J1	F	Jack, 8 point.		WIS.3150/C Sh. 1, Ref. 1.	M693
J2	F	Jack, 8 point.		As J1.	M693

Ref.	Section of Diagram.	Description.	Nominal Value.	Drawing No.	Adm. Ref.
INDUCTANCES.					
L1—L8	A	H.F. Coils (AA).			
L9—L16	B	H.F. Coils (HA).			
L17—L24	C	H.F. Coils (QA).			
L25—L26	C	I.F. Coils for I.F.1.	98 kc s. and 570 kc/s.		
L27—L28	D	I.F. Coils for I.F.2.	98 kc/s. and 570 kc/s.		
L29—L30	D	I.F. Coils for I.F.3.	98 kc/s. and 570 kc/s.		
L31—L32	E	I.F. Coils for I.F.4.	98 kc/s. and 570 kc/s.		
L33—L34	E	I.F. Coils for I.F.5.	98 kc/s. and 570 kc/s.		
L35—L36	E	I.F. Coils for I.F.6.	98 kc/s. and 570 kc/s.		
L37—L38	E	Iron Core Inductances for L.F.1.			
L39B	F	Inductance for Osc. Cal.(OC)	500 kc/s. (CR. 300/1)		
L39A	F	Inductance for Osc. Cal.(OC)	690 kc/s. (CR. 300/2)		
LF1	E	L.F. Filter Unit.		W.8133 Sh. 1, Ed. A.	M671
LAMPS.					
IL1	F	Lamp, M.E.S.	0.2 amps 12 volt.	WIS.3181/C Sh. 1, Ref. 5.	M477
IL2	F	Lamp, M.E.S.	0.2 amps 12 volt.	As IL1.	M477
LS	F	Loudspeaker 5 in. P.M.		WIS.3077 Sh. 1, Ref. 1.	M783
PLUGS AND SOCKETS.					
P1	A	Plug, Aerial.		A.M. Type 161, Ref. 10H/184.	M700
PS1	A	Socket, Aerial.		A.M. Type 56, Ref. 10/H10330.	M747
PS2	F	Socket, 7 pin, Yellow.		WSK.836, Sh. 1, Ed. L.	M788
PS3	A	Plug, R.I.S.		A.M. Type 229, Ref. 10H 528.	M686
CRYSTALS.					
Q1	F	Crystal (OC).	500 kc/s. (CR. 300/1) 690 kc/s. (CR. 300/2)		
Q2	A	Crystal in Cup.		N CP.4790.	
RESISTANCES.					
R1	A	Resistance.	1.0M Ω	WIS.2630 Sh. 1, Ref. 8.	
R2	A	Resistance.	47,000 Ω.	WIS.2630 Sh. 1, Ref. 7.	M723
R3	A	Resistance (AA).	220,000 Ω.	As R1.	
R4	A	Resistance (AA).	4,700 Ω.	As R1.	M719
R5	A	Resistance (AA).	4,700 Ω.	As R1.	M719
R6	A	Resistance (AA).	220,000 Ω.	As R1.	
R7	B	Resistance (HA).	68,000 Ω.	As R1.	M726
R8	B	Resistance (HA).	22,000 Ω.	WIS.2630 Sh. 1, Ref. 3.	M722
R9	B	Resistance.	47,000 Ω.	As R2.	
R10	B	Resistance (HA).	22,000 Ω.	As R2.	
R11	B	Resistance (HA).	4,700 Ω.	As R1.	M719
R12	B	Resistance (HA).	680 Ω.	As R1.	
R13	B	Resistance (HA).	390 Ω.	As R1.	
R14	B	Resistance (HA).	1.0M Ω.	As R1.	
R15	B	Resistance.	390 Ω.	As R1.	
R16	C	Resistance.	47,000 Ω.	As R1.	
R17	C	Resistance.	2,200 Ω.	WIS.2630 Sh. 1, Ref. 8.	
R18	C	Resistance.	47 Ω.	As R17.	
R19	C	Resistance.	220,000 Ω.	As R17.	
R20	C	Resistance (OA).	47 Ω.		
R21	D	Resistance.	47,000 Ω.	WIS.2630 Sh. 1, Ref. 3.	M724
R22	D	Resistance.	2,200 Ω.	As R17.	
R23	D	Resistance.	68,000 Ω.	WIS.2630 Sh. 1, Ref. 7.	M725
R24	D	Resistance.	680 Ω.	As R17.	
R25	D	Resistance	470,000 Ω.	As R17.	

Ref.	Section of Diagram.	Description.	Nominal Value.	Drawing No.	Adm. Ref.
R26	D	Resistance.	47,000 Ω.	As R23.	M723
R27	D	Resistance.	390 Ω.	As R17.	
R28	A	Resistance.	33,000 Ω.	As R23.	
R29.	E	Resistance.	47,000 Ω.	As R17.	
R30	E	Resistance.	220,000 Ω.	As R23.	M728
R31	E	Resistance.	470,000 Ω.	As R17.	
R32	E	Resistance.	220,000 Ω.	As R17.	
R33	E	Resistance.	2,200 Ω.	As R17.	
R34	A	Resistance.	10,000 Ω.	As R17.	
R35	E	Resistance.	10,000 Ω.	As R17.	
R36	E	Resistance.	47,000 Ω.	As R17.	
R37	E	Resistance.	470,000 Ω.	As R17.	
R38	E	Resistance.	470,000 Ω.	As R17.	
R39	E	Resistance.	10,000 Ω.	As R17.	
R40	E	Resistance.	10,000 Ω.	As R17.	
R41	F	Resistance.	1M Ω.	As R17.	
R42	E	Resistance.	680 Ω.	As R17.	
R43	E	Potentiometer.	500,000 Ω.	WIS.2239 Sh. 2, Ref. 10.	M703
R44	E	Resistance.	2,200 Ω.	As R17.	
R45	E	Resistance.	470,000 Ω.	As R17.	
R46	E	Resistance.	1.0M Ω.	As R17.	
R47	F	Resistance.	47,000 Ω.	As R17.	
R48	F	Resistance.	47,000 Ω.	As R17.	
R49	F	Resistance.	4,700 Ω.	As R17.	M719
R50	F	Resistance.	220,000 Ω.	As R17.	
R51	F	Resistance.	1,000 Ω.	As R23.	M717
R52	F	Resistance.	47,000 Ω.	As R21.	M724
R53	F	Potentiometer.	10,000 Ω.	WIS.2239 Sh. 2, Ref. 11.	M701
R54	F	Potentiometer.	25,000 Ω.	WIS.2239 Sh. 2, Ref. 12.	M702
R55	A	Resistance.	68,000 Ω.	As R17.	
R56	A	Resistance.	47 Ω.	As R21.	
R57	B	Resistance.	470 Ω.	As R17.	M715
R58	C	Resistance.	470 Ω.	As R17.	M715
R59	C	Resistance.	470 Ω.	As R17.	M715
R60	D	Resistance.	470 Ω.	As R17.	M715
R61	E	Resistance.	470 Ω.	As R17.	M715
R62	E	Resistance.	470 Ω.	As R17.	M715
R63	F	Resistance.	470 Ω.	As R17.	M715
R64	F	Resistance.	470 Ω.	As R17.	M715
R65	F	Resistance (OC).	150,000 Ω.		
R66	B	Resistance (HA).	100,000 Ω.		
R67	B	Resistance (HA).	68,000 Ω.		
R68	F	Resistance.	4,700 Ω.	WIS.2630 Sh. 1, Ref. 2.	M720
R70	E	Resistance.	680 Ω.	As R17.	
R71	E	Resistance.	680 Ω.	As R17.	
R72	F	Resistance.	120 Ω.	WIS.2604 Sh. 1, Ref. 3.	M713
R73	F	Resistance	10,000 Ω	As R23.	
SWITCHES.					
S1	C	Switch, H.F., Click Plate—1st Section.		WSK.1197/C Sh. 266.	M680
S2	C	Switch, H.F. (OA).			
S3	C	Switch, H.F. (QA).			
S4	B	Switch, H.F. (HA).			
S5	B	Switch, H.F. (HA).			
S6	A	Switch, H.F. (AA).			
S7	A	Switch, H.F. (AA).			
S8	E	Switch, I.F.		WIS.1197/C Sh. 265.	M679
S9	E	Switch, I.F.		As S8.	M679
S10	D	Switch, I.F.		As S8.	M679
S11	D	Switch, I.F.		As S8.	M679
S12	E	Passband and L.F. Filter Switch.		WIS.1197/C Sh. 270.	M682

Ref.	Section of Diagram.	Description.	Nominal Value.	Drawing No.	Adm. Ref.
S13	F	Operational Switch.		WIS.1197/C Sh. 271.	M681
S14	D	A.G.C. Switch.		WIS.3217/C Sh. 1, Ref. 1.	M683
S15	F	Mains Switch.		As S14.	M683
TRANSFORMER.					
T2	F	Output Transformer.		WKS.2528 Sh. 1.	M672
VALVES.					
V1	A	Valve, Type ARTH.2.			CV1347
V2	B & C	Valve, Type 6K8 or X66.			CV1193
V3	D	Valve, Type KTW.61.			CV1281
V4	D	Valve, Type KTW.61.			CV1281
V5	E	Valve, Type DH.63.			CV587
V6	E	Valve, Type KTW.61.			CV1281
V7	F	Valve, Type 6V6G.			CV509
V8	F	Valve, Type KTW.61.			CV1281

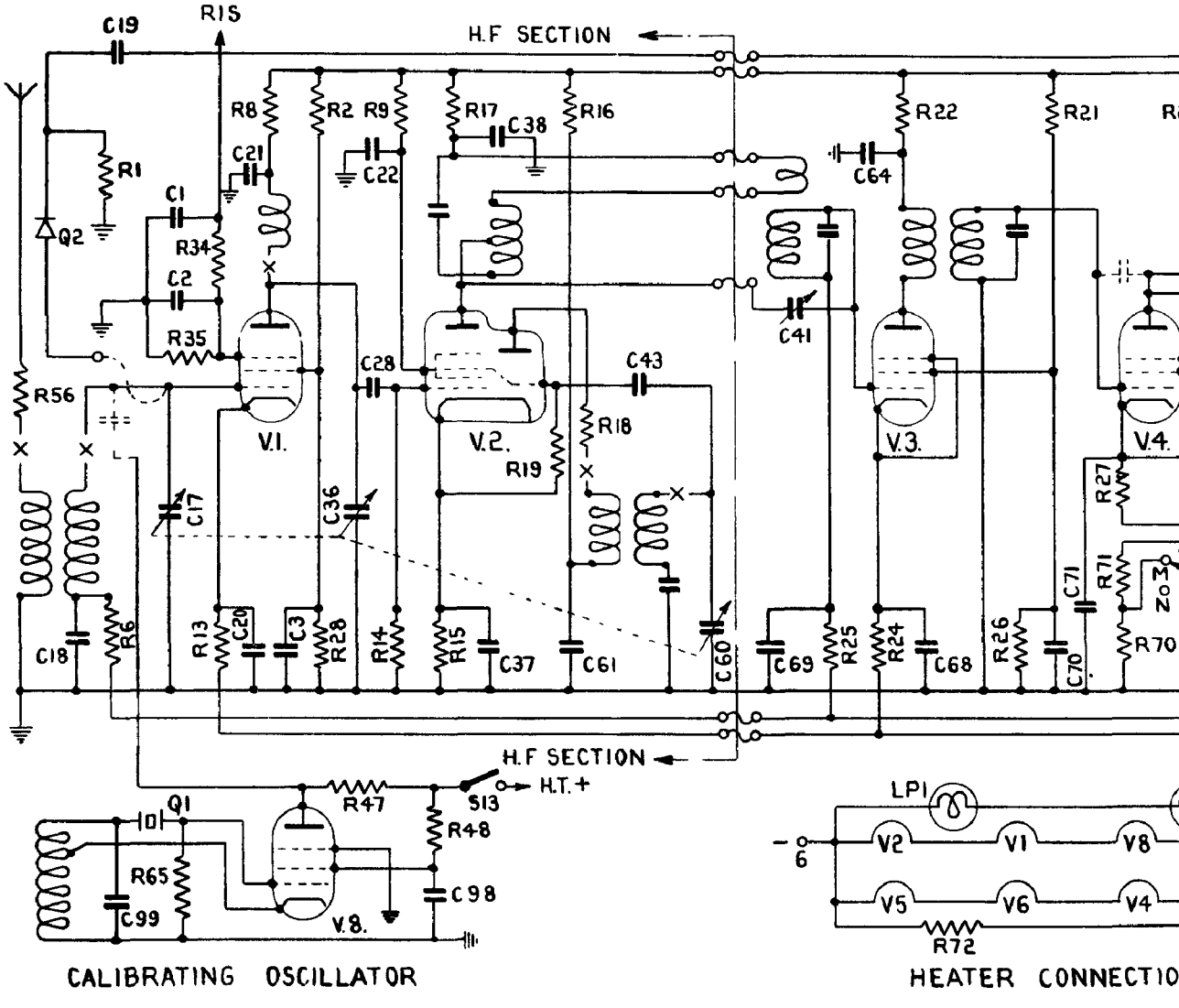

SIMPLIFIED CIRCUIT DIAGRAM OF TYPE

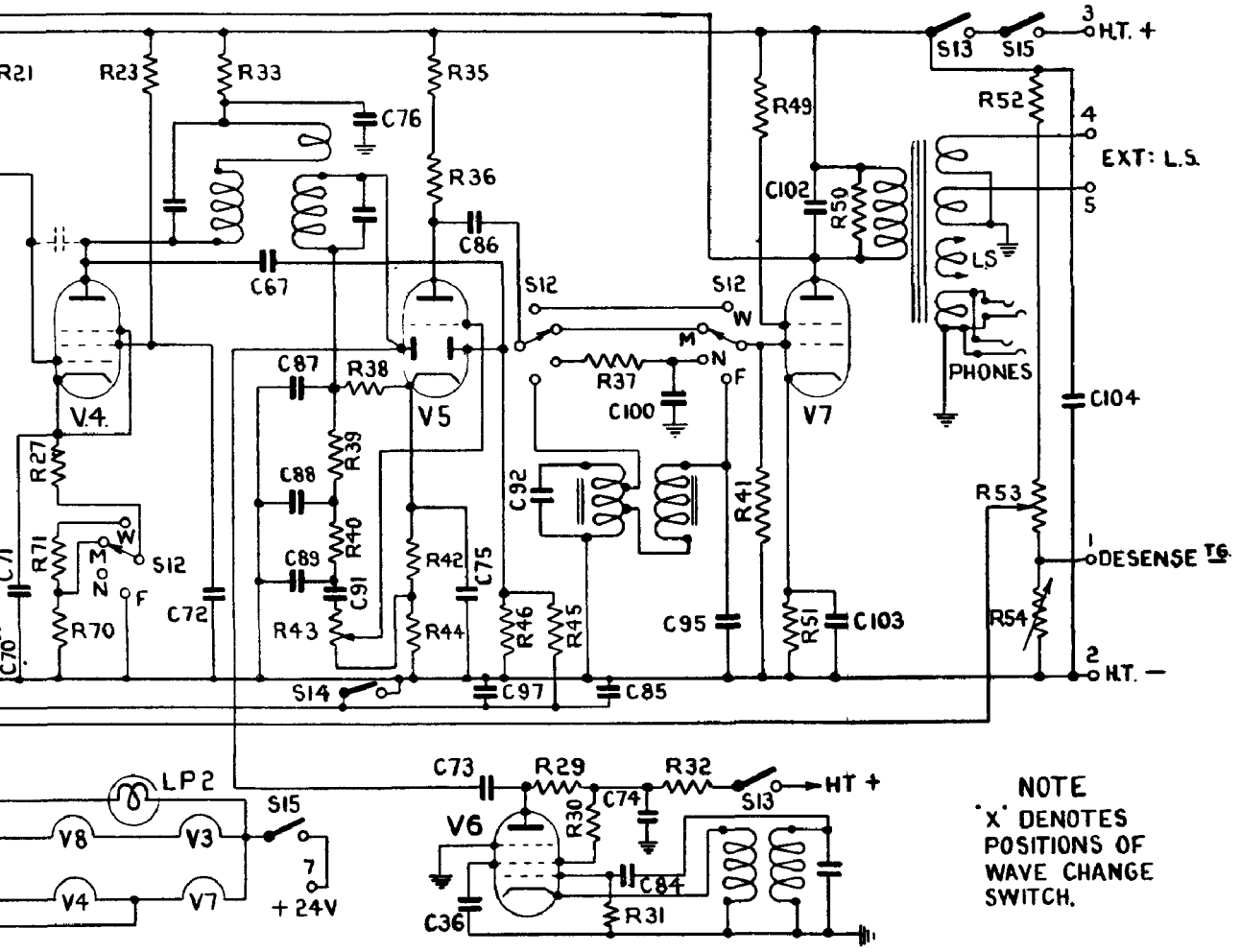

NNECTIONS BEAT FREQUENCY OSCILLATOR

WZ. 1818. Sh. 1 (issue 2).

OF TYPE CR. 300/1 AND CR. 300/2 RECEIVER.

NOTES REGARDING DIAGRAM OF CONNECTIONS WE/W.6890.

1. All switches are shown in full counter-clockwise position.

2. The bandchange switch S1 to S7 is shown in its band 1 position and the I.F. switch S8 to S11 in its 570 kc/s position.

3. The I.F. switch S8 to S11 is linked in such a manner that it selects 98 kc/s when the bandchange switch S1 to S7 is on bands 1 and 4. Thus, for the position S1 to S7 shown (i.e. Band 1), S8 to S11 will actually be in the 98 kc/s position.

4. On inductance units the small figures refer to coil pin numbers.
   Figures in circles refer to connections to tag boards of I.F. units.

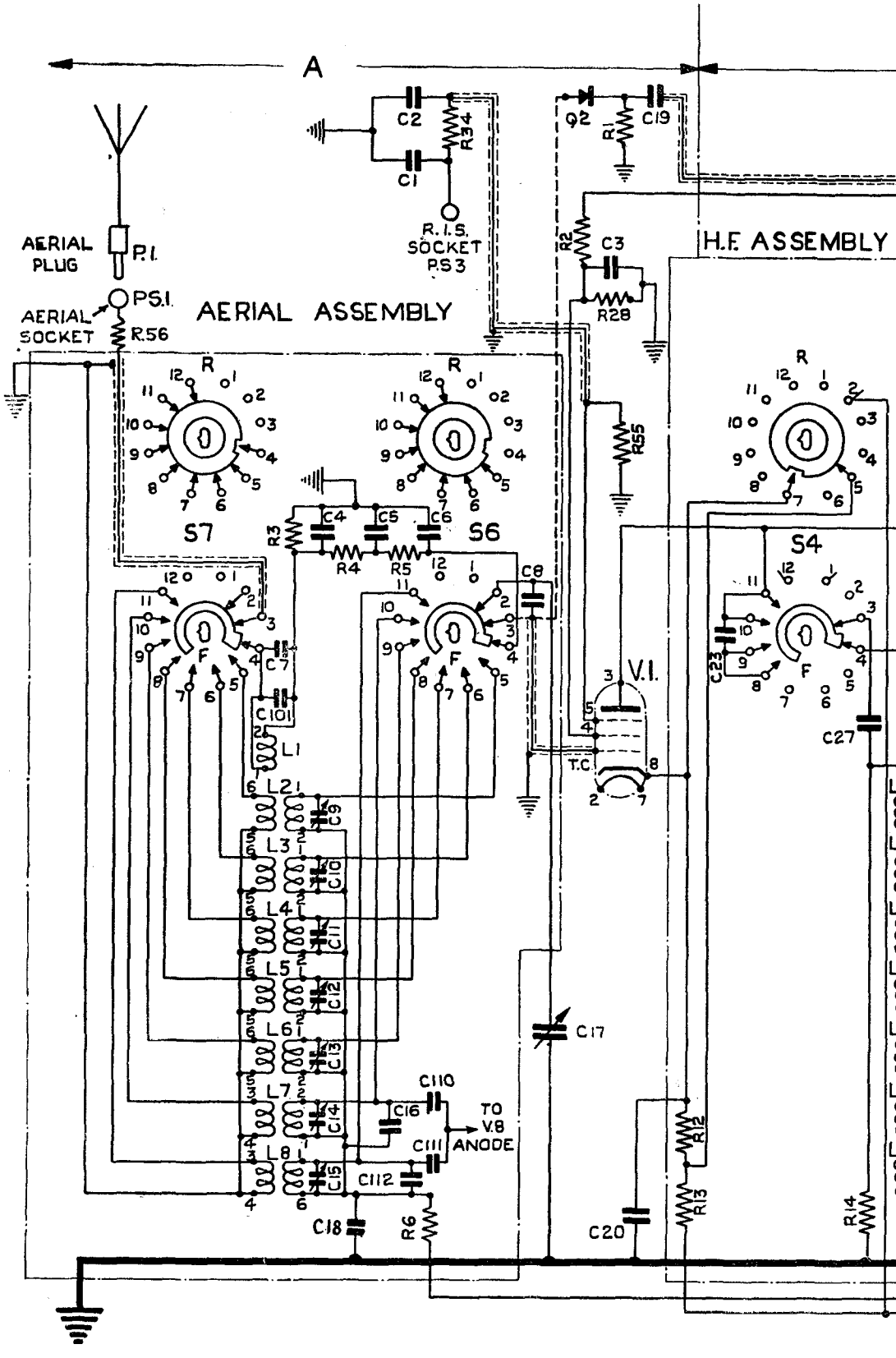
A
AERIAL PLUG
P.I.
PS.I.
AERIAL SOCKET
R.56
AERIAL ASSEMBLY
C2
C1
R34
R.I.S. SOCKET PS3
Q2
R1
C19
R2
C3
R28
H.F. ASSEMBLY
R55
S7
S6
S4
R3
C4
C5
C6
R4
R5
C8
C7
C101
L1
L2
L3
L4
L5
L6
L7
L8
C9
C10
C11
C12
C13
C14
C15
C16
C110
C111
C112
C18
R6
C17
V.I.
T.C.
C23
C27
C20
R12
R13
R14
TO V.8 ANODE

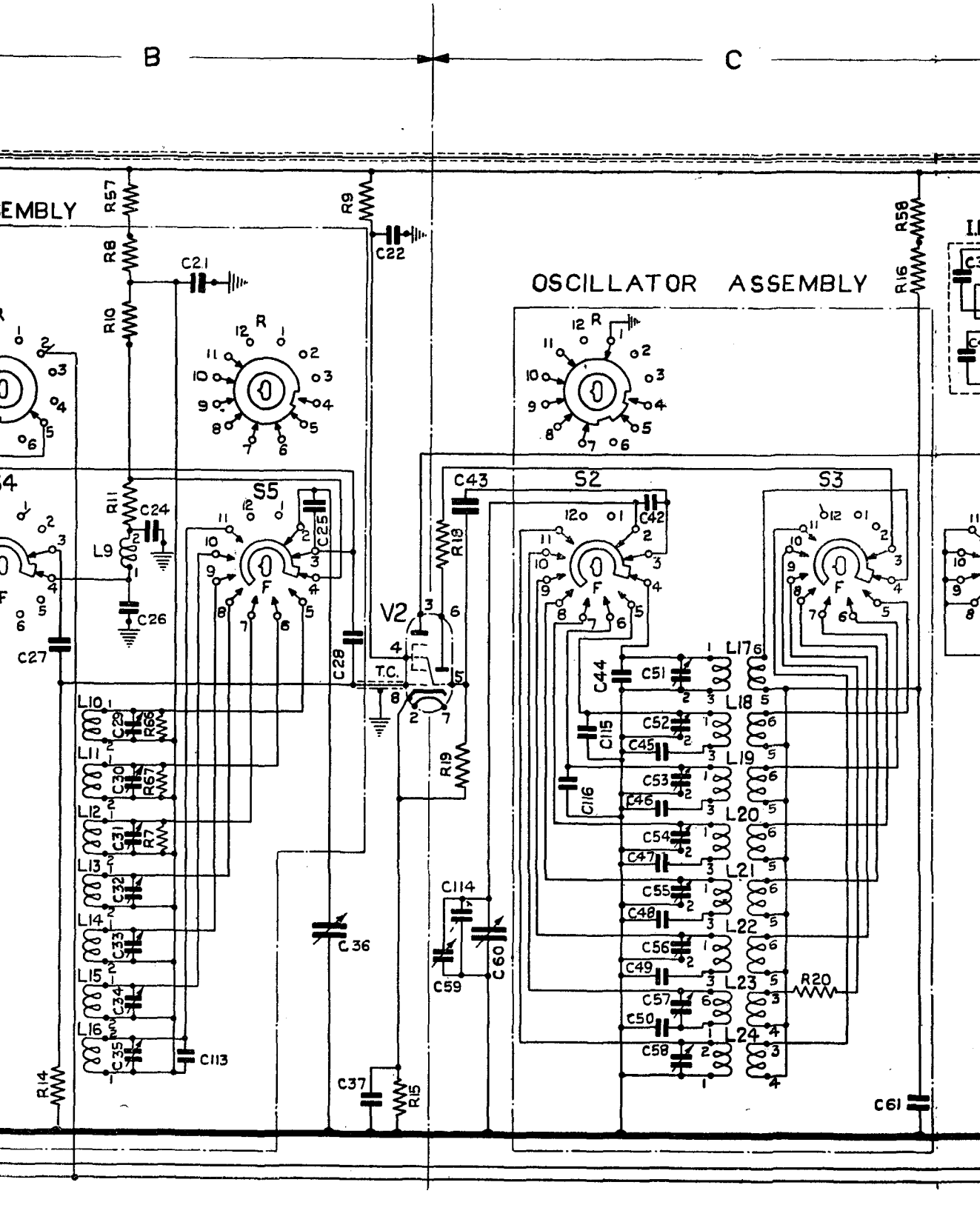

CIRCUIT DIAGRAM OF TYPE CR

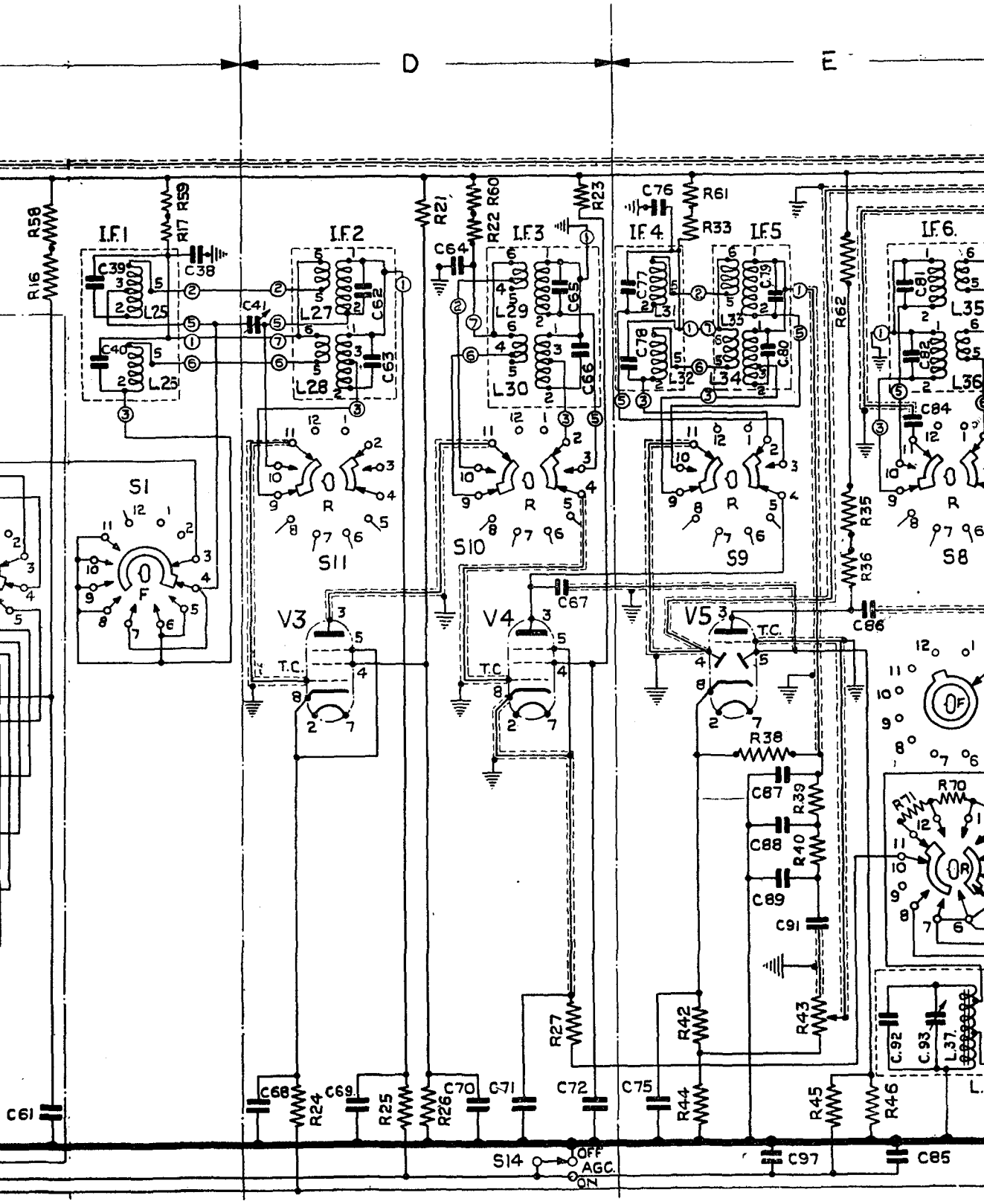

TYPE CR 300/1 AND CR. 300/2 RECEIVER.

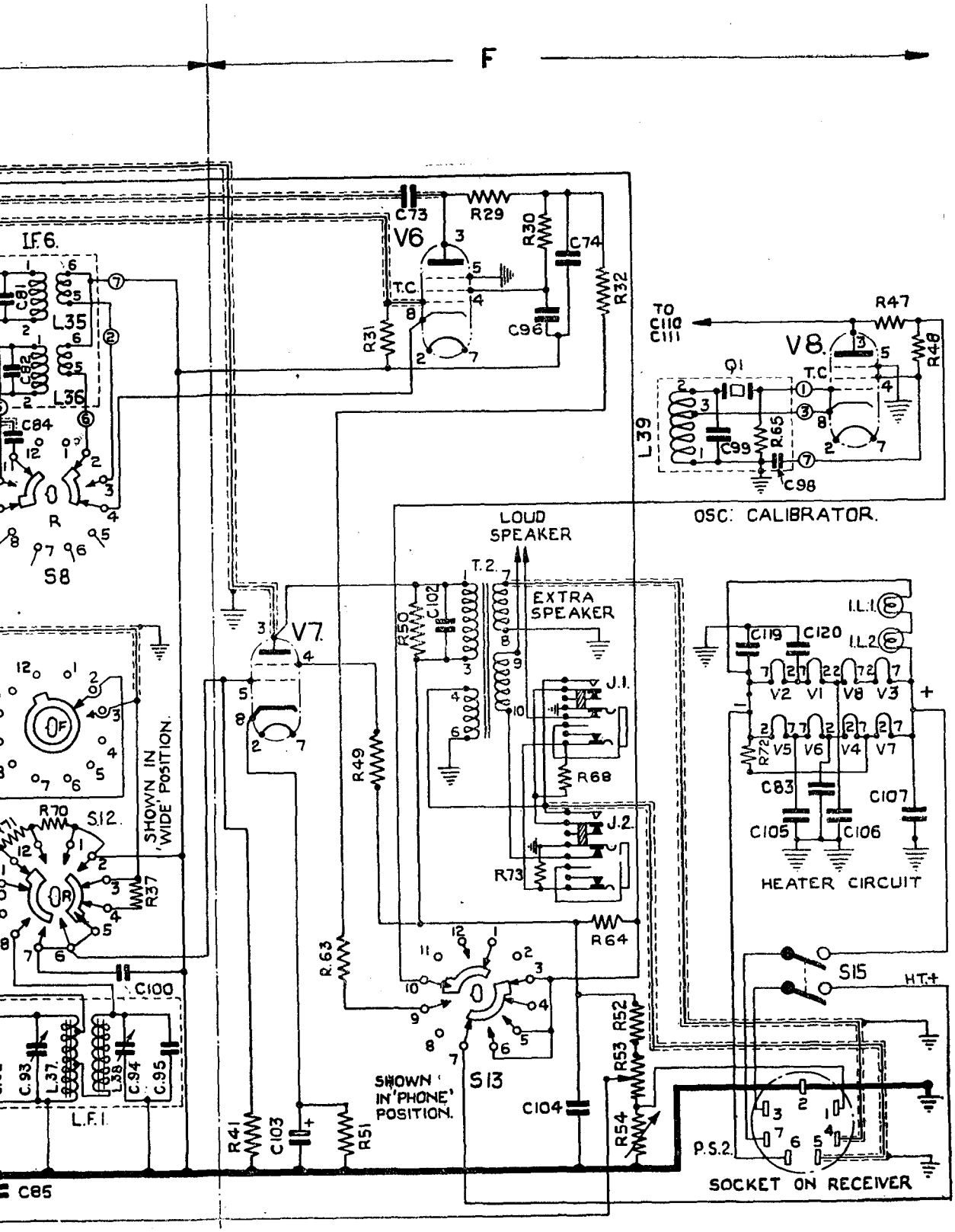
F
I.F.6.
C81
L35
C82
L36
C84
R
S8
C73
V6
R29
R30
C74
T.C.
C96
R31
R32
TO C110 C111
R47
V8
R48
Q1
T.C.
L39
C99
R65
C98
OSC. CALIBRATOR.
LOUD SPEAKER
T.2.
EXTRA SPEAKER
R50
C102
V7
R49
J.1.
R68
J.2.
R73
R64
R63
S13
SHOWN IN 'PHONE' POSITION.
C104
R52
R53
R54
P.S.2.
SOCKET ON RECEIVER
I.L.1.
I.L.2.
C119
C120
V2
V1
V8
V3
V5
V6
V4
V7
R72
C83
C107
C105
C106
HEATER CIRCUIT
S15
H.T.+
SHOWN IN 'WIDE' POSITION.
R70
S12.
R37
C100
C.93
L.37.
L38
C.94
C.95
L.F.I.
R41
C103
R51
C85

WE/W. 6890. Sh. 1.

COMPONENT LIST FOR RECEIVER SUPPLY UNIT.

TYPE 889.

Note. It is essential, when ordering spares for this Unit, to quote the Type reference shown on the Supply Unit (Type 889), Serial No. of Unit, the reference number of the component (e.g., C5), and the drawing number of the component, thus :—

Type 889, MC....., C5, WIS. 3368/C, Sh. 1, Ref. 1.

The component part references in column 1 will be found on Drg. WE/W. 7530/C, Sh. 1, page 37.

Ref.	Description.	Nominal Value.	Drawing No.	Adm. Ref.
CONDENSERS.				
C1	Condenser.	2μF.	WIS.3367/C Sh. 1, Ref. 1.	M740
C2	Condenser.	As C1.	As C1.	M740
C3	Condenser.	As C1.	As C1.	M740
C4	Condenser.	As C1.	As C1.	M740
C5	Condenser.	0.1μF.	WIS.2927 Sh. 1. Ref. 7.	M741
C6	Condenser.	As C5.	As C5.	M741
C7	Condenser.	As C5.	As C5.	M741
C8	Condenser.	As C5.	As C5.	M741
C9	Condenser.	As C5.	As C5.	M741
C10	Condenser.	As C5.	As C5.	M741
C11	Condenser.	0.1μF.	WIS.2927 Sh. 1, Ref. 8.	
C12	Condenser.	As C11.	As C11.	
C13	Condenser.	0.5μF.	WIS.2927 Sh. 1. Ref. 11.	M742
C14	Condenser.	2μF.	As C1.	M740
C15	Condenser, Electrolytic.	8+8+8μF.	WIS.2781.	M731
C16	Condenser.	As C13.	As C13.	M742
C17	Condenser.	As C13.	As C13.	M742
C18	Condenser.	0.01μF.	WIS.2970 Sh. 1, Ref. 16.	M935
C20	Condenser.	As C18.	As C18.	M935
C21	Condenser.	As C18.	As C18.	M935
C24	Condenser.	As C5.	As C5.	M741
C25	Condenser.	As C5.	As C5.	M741
C26	Condenser.	As C5.	As C5	M741
C27	Condenser.	As C5.	As C5.	M741
C28	Condenser.	As C5.	As C5.	M741
C29	Condenser.	As C13.	As C13.	M742
FUSEHOLDERS.				
F1	Fuseholder.		WIS.2647 Sh. 1, Ref. 1.	M677
CHOKES.				
L1	Choke.	550μH.	WIS.3360/C Sh. 1, Ref. 1.	M736
L2	Choke.	As L1.	As L1.	M736
L3	Choke.	As L1.	As L1.	M736
L4	Choke.	650μH.	WIS.3631/C Sh. 1, Ref. 1.	M734
L5	Choke.	7H.	WIS.3362/C Sh. 1. Ref. 1.	M733
L6	Choke.	450μH.	WIS.3391/C Sh. 1, Ref. 1.	M933
L7	Choke.	As L6.	As L6.	M933
L8	Choke.	1.75μH.	WIS.3402/C Sh. 1, Ref. 1.	
L9	Choke.	As L8.	As L8.	
L10	Choke.	As L8.	As L8.	
L11	Choke.	110μH.	WIS.3401/C Sh. 1, Ref. 1.	M934
L12	Choke.	As L11.	As L11.	M934
PL1	Lamp, Pilot.	6 volt 0.3 amps.	WIS.3181/C Sh. 1, Ref. 7.	M510
PS1	Socket, 7 pin.	Yellow.	WSK.836 Sh. 1. Ed. L.	M788

Ref.	Description.	Nominal Value.	Drawing No.	Adm. Ref.
RESISTANCES.				
R1	Resistance.	800 ohms.	WIS.3366/C Sh. 1, Ref. 1.	M743
R2	Resistance.	1,200 ohms.	WIS.3366/C Sh. 1, Ref. 2.	M744
R3	Resistance.	47 ohms.	WIS.2630 Sh. 1, Ref. 7.	M745
R4	Resistance.	47 ohms.	As R3.	M745
SWITCHES.				
S1	Switch, Rotary.	4 pole, 3 way.	WIS.3358/C Sh. 1, Ref. 1.	M737
S2	Switch, On-Off.		WIS.1012.	M738
T1	Transformer.		WIS.3359 Sh. 1, Ref. 1.	M732
TB1	Tag Board.	2 way.	WIS.2792.	
	Terminal Block.	6 way.	WIS.3220/C Sh. 1, Ref. 4.	M739
V1	Valve, Type OZ4.			CV692
V1B1	Vibrator.	24 volt.	WIS.2497 Sh. 1, Ref. 5.	M488

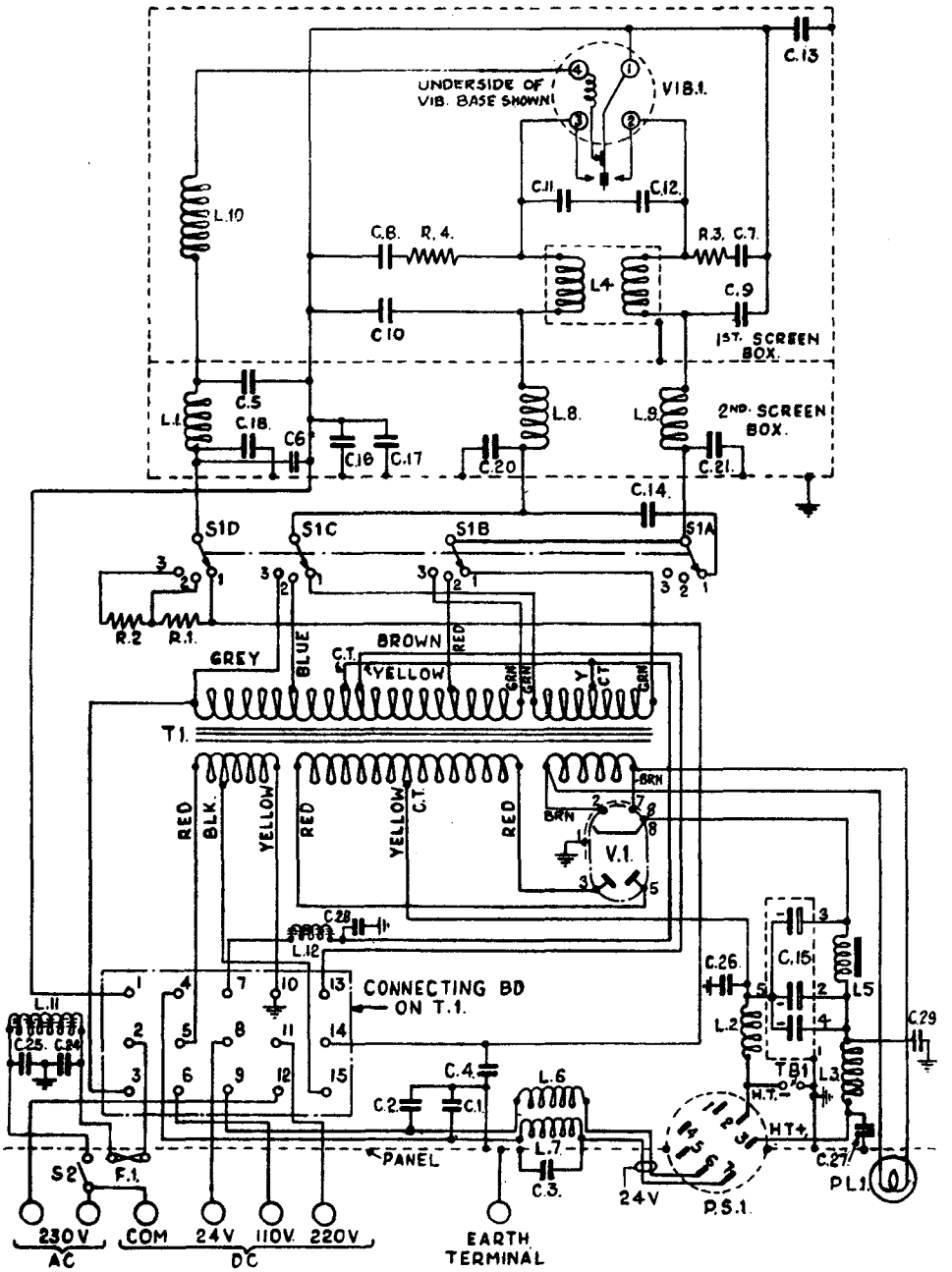

CONNECTIONS TO BE MADE ON CONNECTING BOARD:-

230V. A.C.	WORKING.	(SWITCH S.1. TO 1)	CONNECT	2 TO 3: 4 TO 5: 9 TO 10: 12 TO 13.
24V. D.C.	"	(" " " 1)	"	1 TO 2 & 9: 4 TO 7, 8 & 14.
100V. D.C.	"	(" " " 2)	"	1 TO 2: 4 TO 5: 7 TO 6 & 14: 9 TO 10.
110V. D.C.	"	(" " " 2)	"	1 TO 2: 4 TO 15: 7 TO 6 & 14: 9 TO 10.
200V D.C	"	(" " " 3)	"	1 TO 2: 4 TO 5: 7 TO 11 & 14: 9 TO 10.
220V. D.C.	"	(" " " 3)	"	1 TO 2: 4 TO 15: 7 TO 11 & 14: 9 TO 10.

TO EARTH H.T.- OUTPUT, STRAP TERMINALS ON T.B.1.

WE/W. 7350/C. Sh. 1.

CIRCUIT DIAGRAM OF TYPE 889 SUPPLY UNIT FOR TYPE CR. 300/1 & 2 RECEIVER.

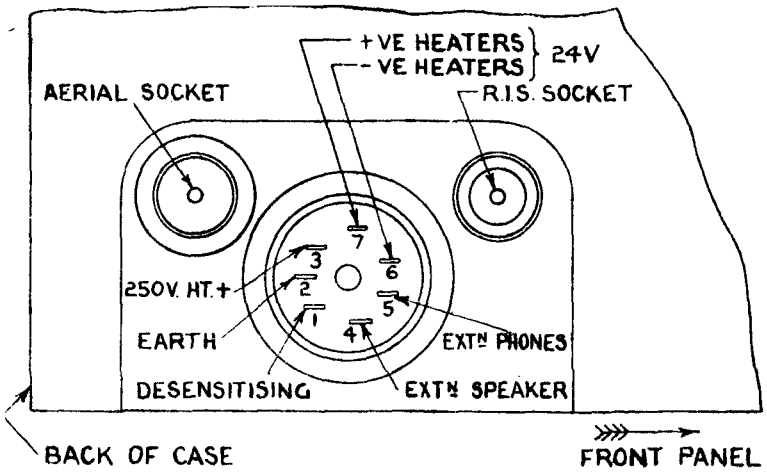

Fig. 5. Power Socket Connections.

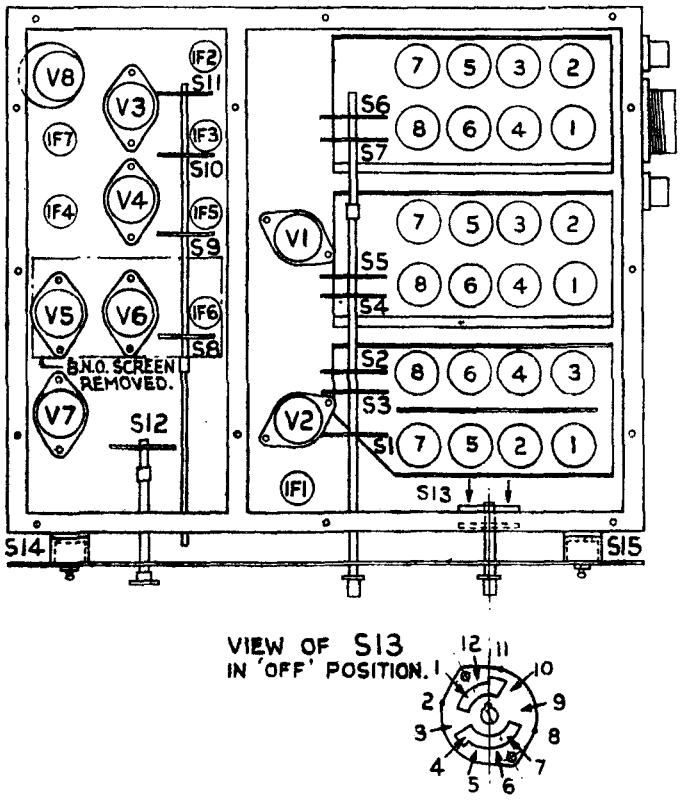

Fig. 7. Position of Switches.

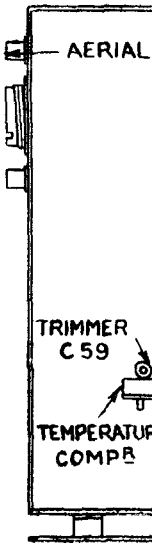

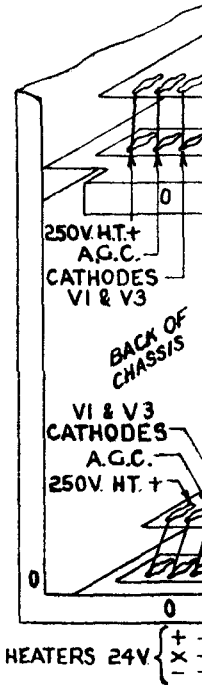

NOTE—In th
from

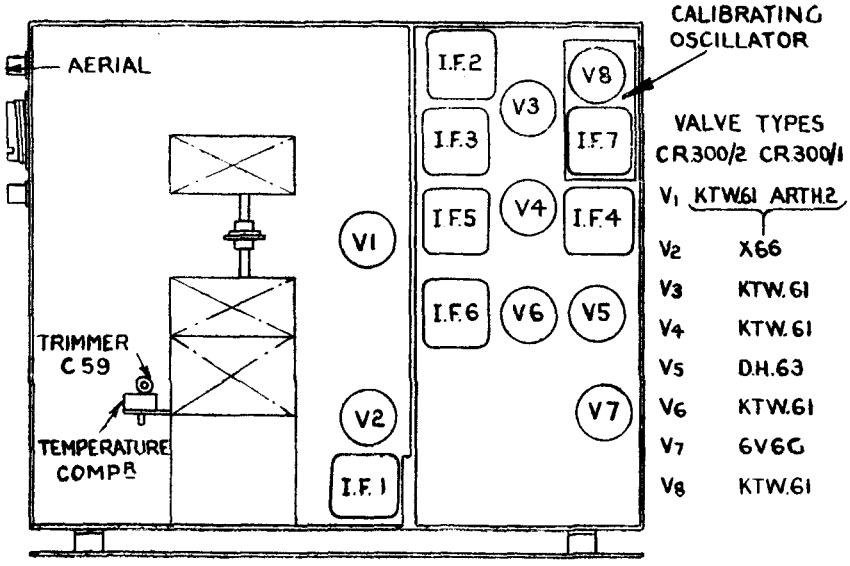

Fig. 6. Position of Valves in Receiver.

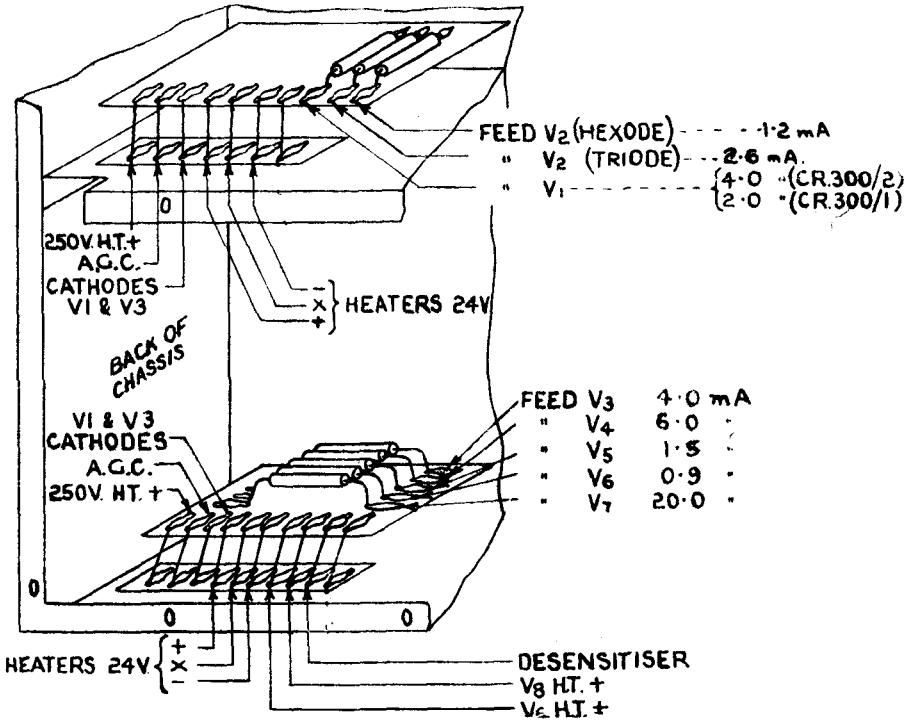

NOTE—In the CR.300/2 model the connection between the 3rd pair of tags from the right (V.8 H.T. +) is omitted.

Fig. 8. Checking Valve Feeds.

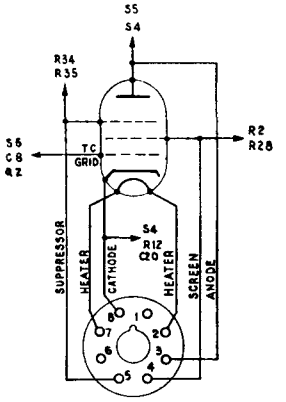

V.1
KTW.61 (FOR CR.300/2)
OR
ARTH. 2 (FOR CR.300/1)
VARIABLE-MU. HF. PENTODE.

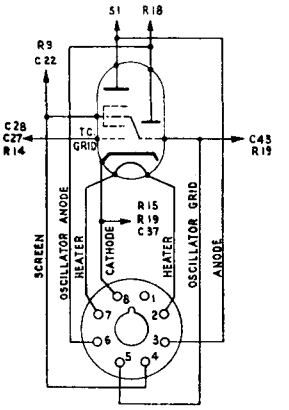

V.2
6K8 OR X66.
TRIODE - HEXODE FREQUENCY CHANGER.

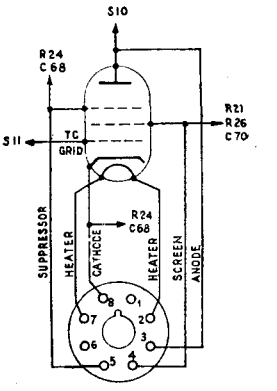

V.3
KTW. 61

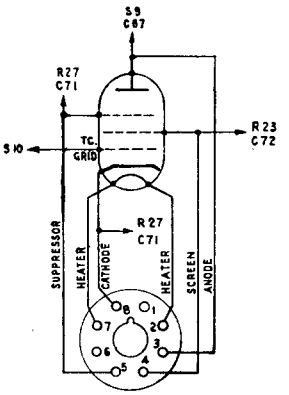

V.4
KTW.61

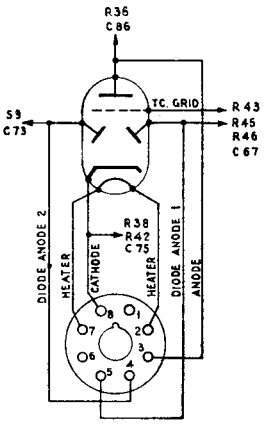

V.5
DH. 63
DOUBLE DIODE-TRIODE.

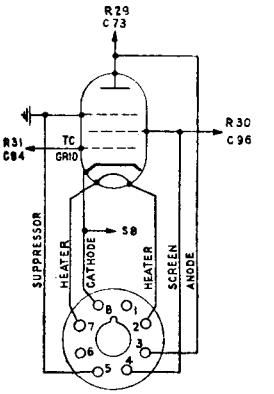

V.6
KTW. 61.

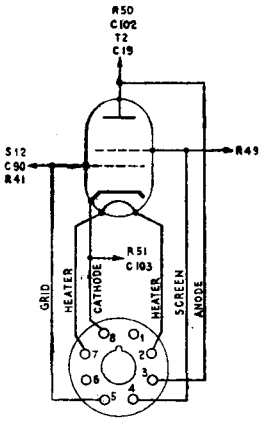

V.7.
6 V. 6 G.
POWER PENTODE

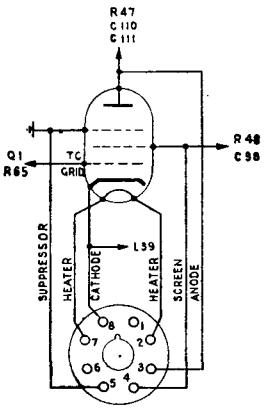

V.8
KTW. 61

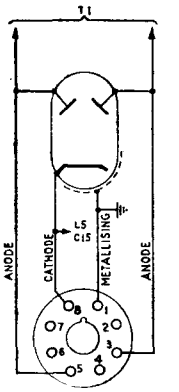

V.1
OZ.4
FULL WAVE COLD CATHODE GAS RECTIFIER
(ON TYPE 889 POWER SUPPLY UNIT.)

ALL VALVE BASES ARE AS VIEWED FROM UNDERSIDE.

WZ. 1865. Sh. 1.

CONNECTIONS TO VALVE BASES. (41)

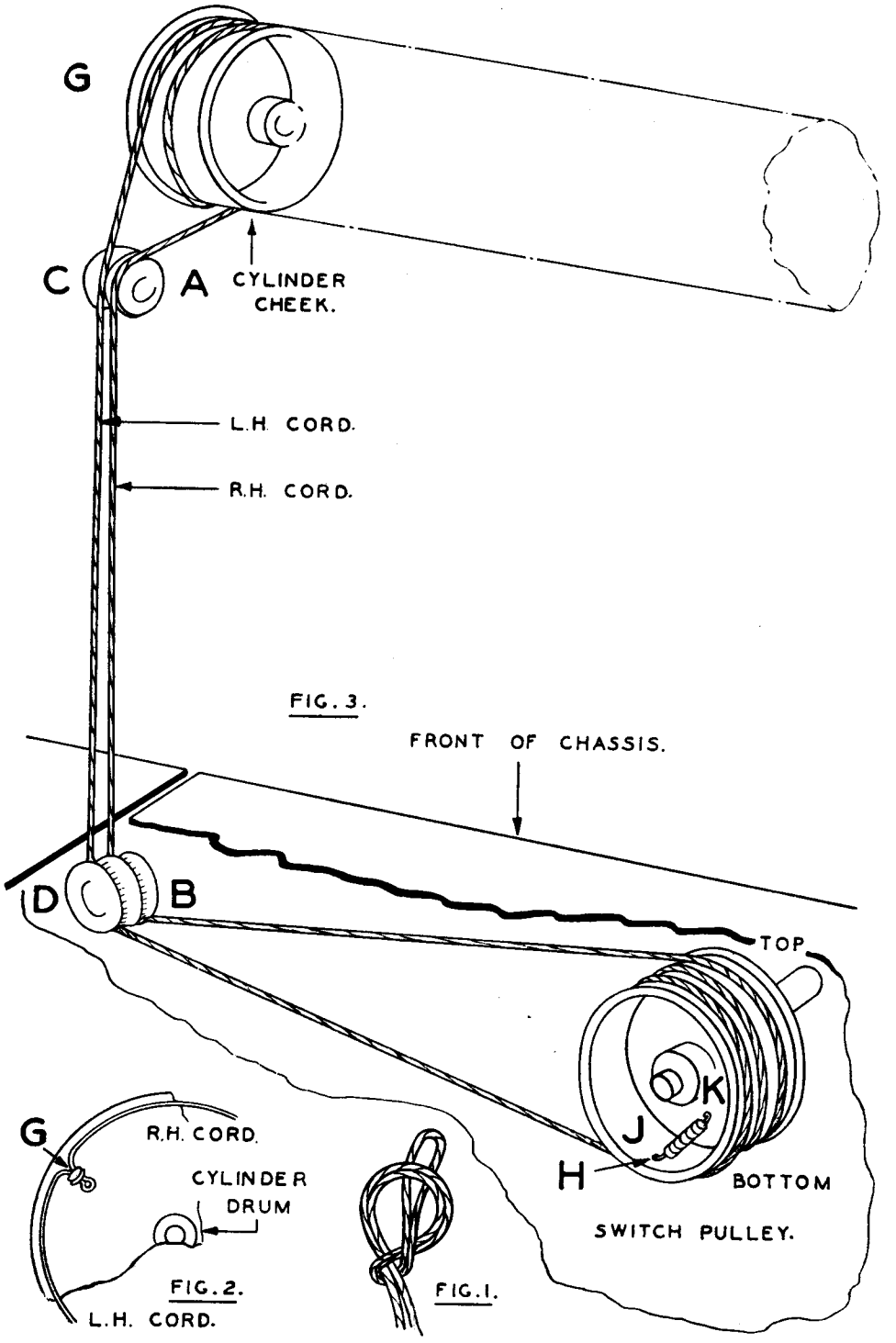

WZ. 1922/C. Sh. 1.

METHOD OF FIXING RANGE DRUM ACTUATING CORD.

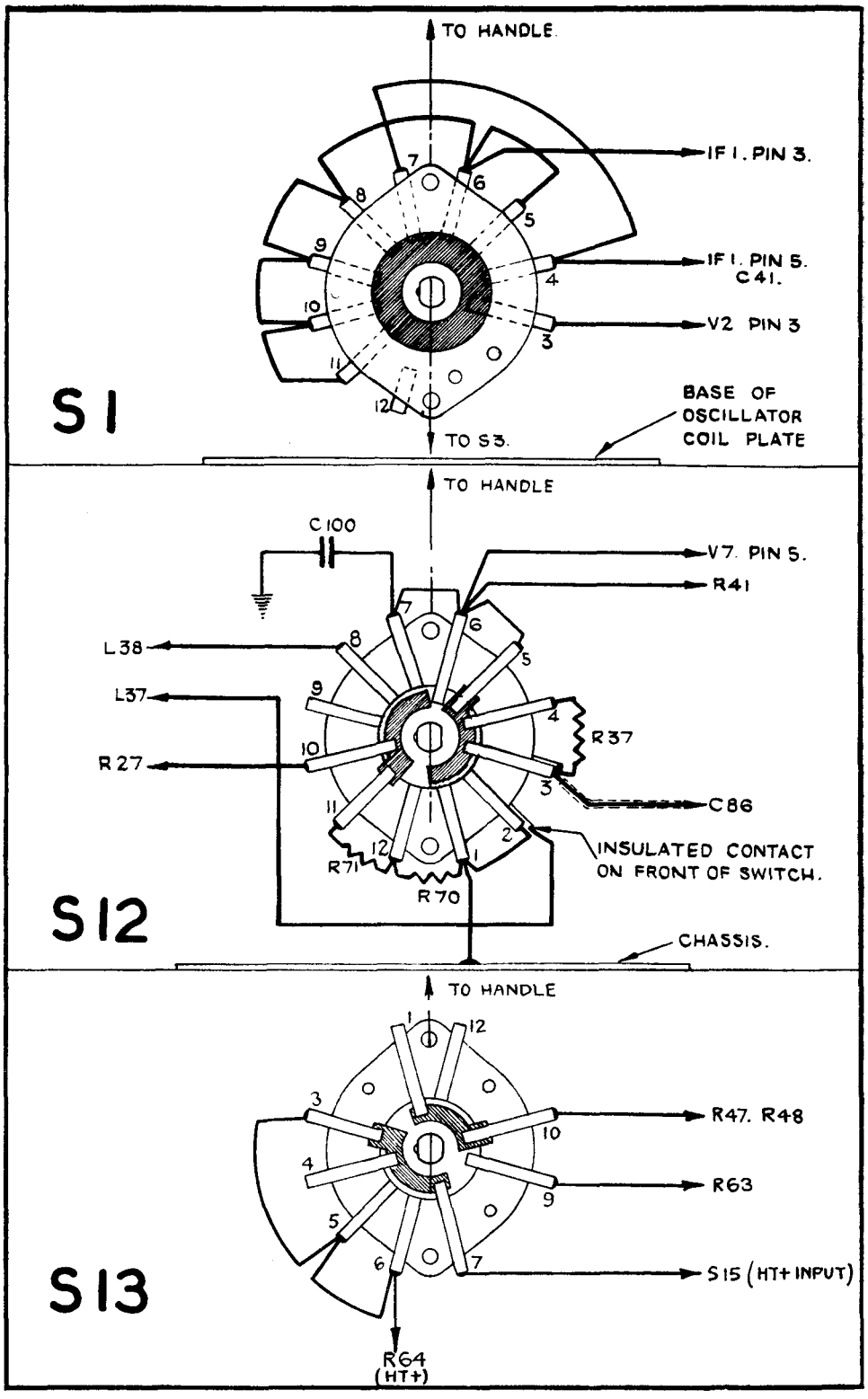
TO HANDLE
IF 1. PIN 3.
IF 1. PIN 5.
C41.
V2 PIN 3
BASE OF
OSCILLATOR
COIL PLATE
TO S3.
S1
TO HANDLE
C100
V7. PIN 5.
R41
L38
L37
R27
R37
C86
INSULATED CONTACT
ON FRONT OF SWITCH.
R71
R70
CHASSIS.
S12
TO HANDLE
R47. R48
R63
S15 (HT+ INPUT)
R64
(HT+)
S13

WZ. 1864/C. Sh. 1.

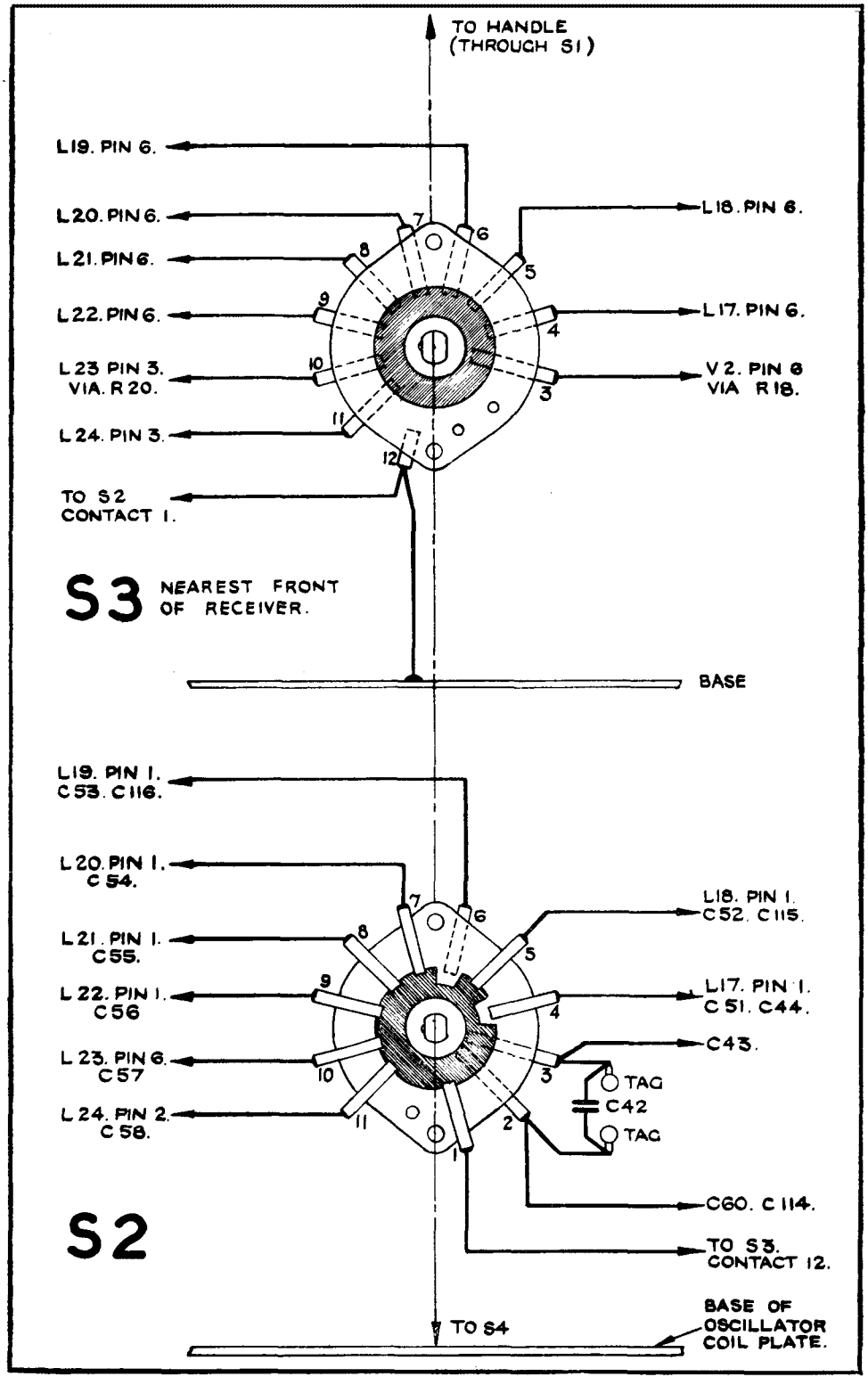

WZ. 1864/C. Sh. 2.

ONNECTIONS.
er on underside.)

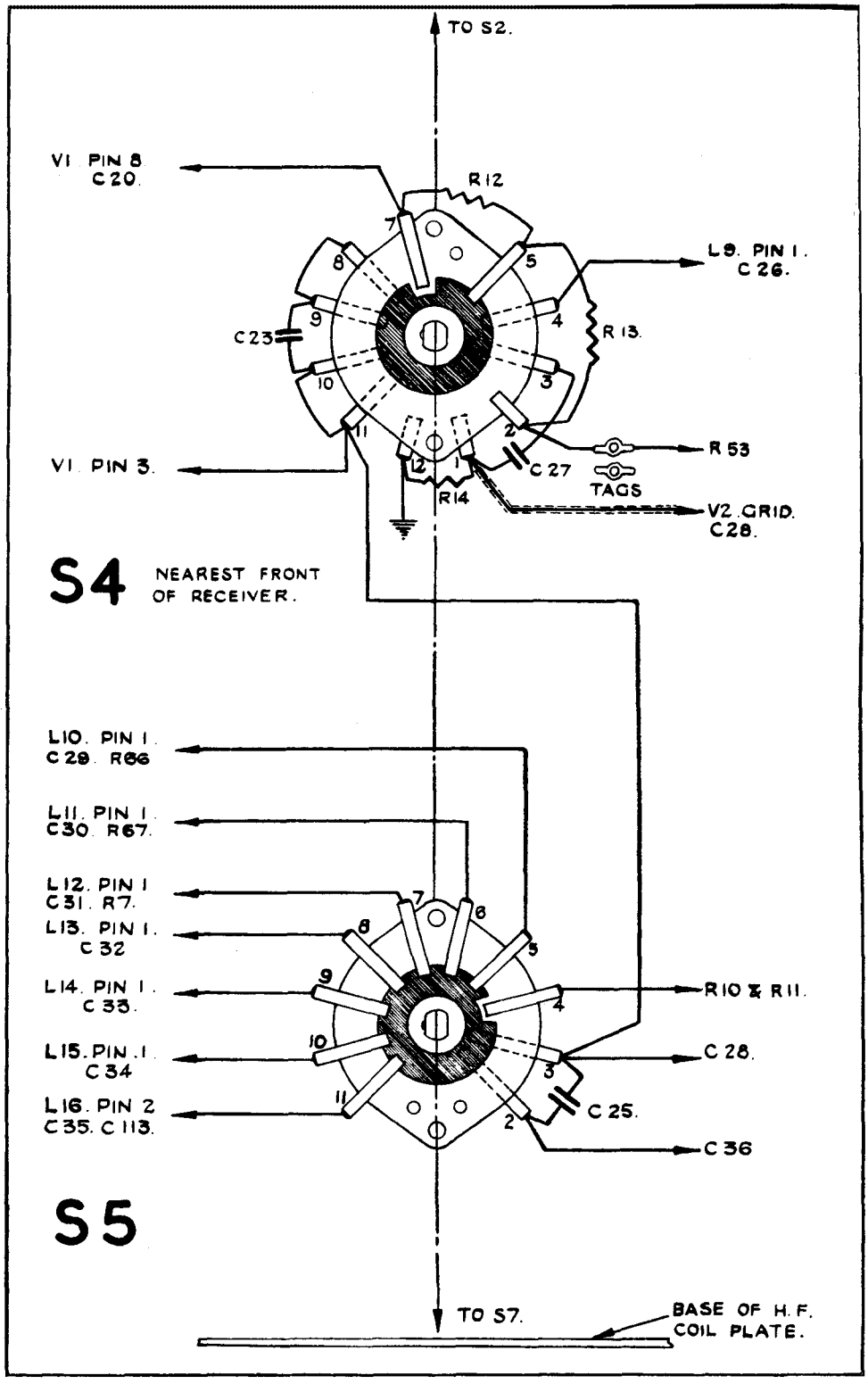
TO S2.
V1 PIN 8
C20.
R12
L9. PIN 1.
C26.
R13.
C23
V1 PIN 3.
R53
C27
TAGS
R14
V2 GRID.
C28.
S4
NEAREST FRONT
OF RECEIVER.
L10. PIN 1.
C29. R66
L11. PIN 1.
C30. R67.
L12. PIN 1
C31. R7.
L13. PIN 1.
C32
L14. PIN 1.
C33.
L15. PIN 1.
C34
L16. PIN 2
C35. C113.
R10 & R11.
C28.
C25.
C36
S5
TO S7.
BASE OF H.F.
COIL PLATE.

WZ. 1864/C. Sh. 3.

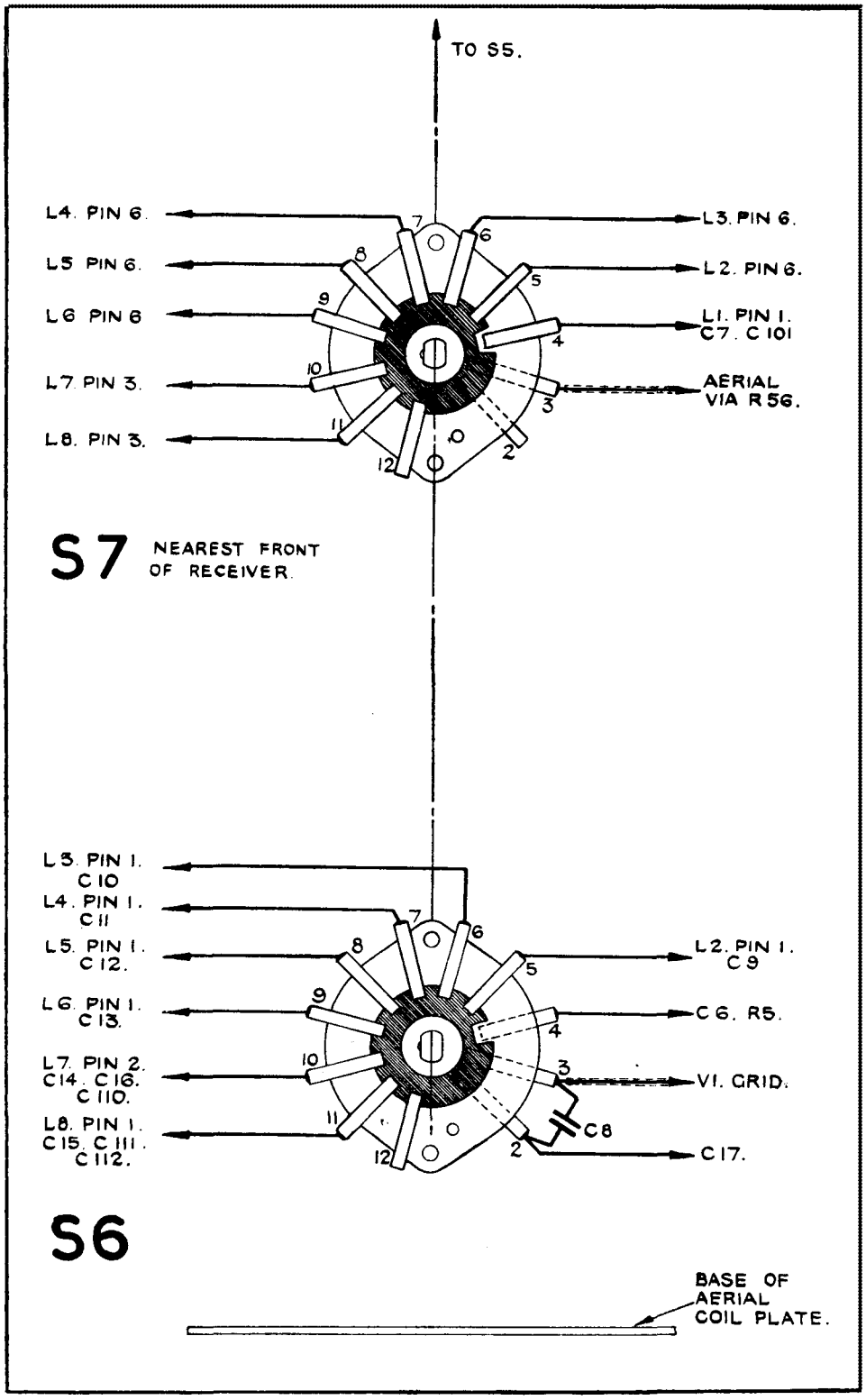

WZ. 1864/C. Sh. 4.

ROTARY SWITCH CONNECTIONS.
(View from rear of receiver on underside.)

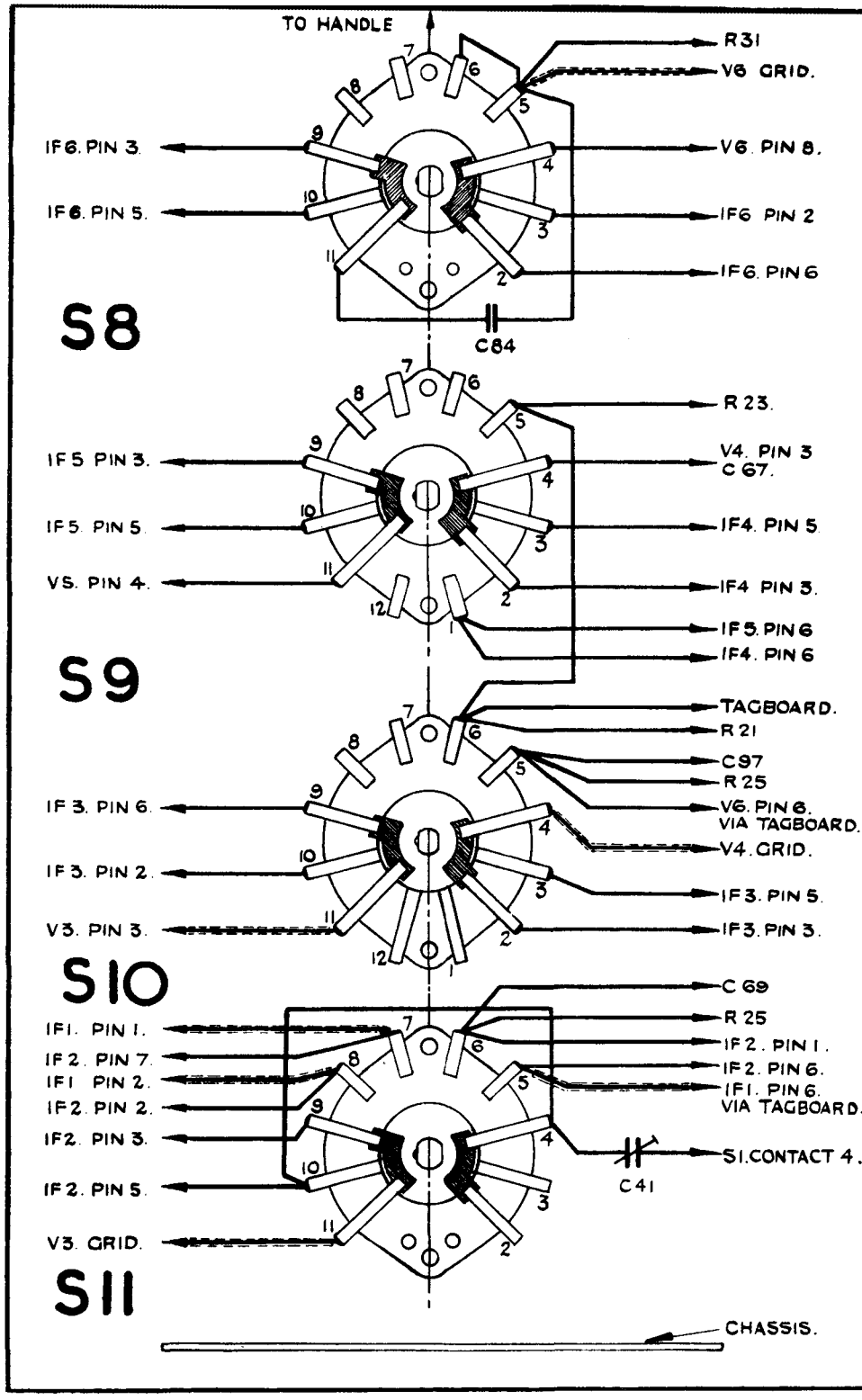
TO HANDLE
R31
V6 GRID.
IF6. PIN 3.
V6. PIN 8.
IF6. PIN 5.
IF6 PIN 2
IF6. PIN 6
S8
C84
R 23.
IF 5 PIN 3.
V4. PIN 3
C 67.
IF 5. PIN 5.
IF4. PIN 5
VS. PIN 4.
IF4 PIN 3.
IF 5. PIN 6
IF4. PIN 6
S9
TAGBOARD.
R 21
C97
R 25
IF 3. PIN 6.
V6. PIN 6.
VIA TAGBOARD.
V4. GRID.
IF 3. PIN 2.
IF 3. PIN 5.
V3. PIN 3.
IF 3. PIN 3.
S10
C 69
IF1. PIN 1.
R 25
IF 2. PIN 7.
IF 2. PIN 1.
IF1 PIN 2.
IF 2. PIN 6.
IF 2. PIN 2.
IF1. PIN 6.
VIA TAGBOARD.
IF2. PIN 3.
S1. CONTACT 4.
C41
IF 2. PIN 5.
V3. GRID.
S11
CHASSIS.

WZ. 1864/C. Sh. 5.

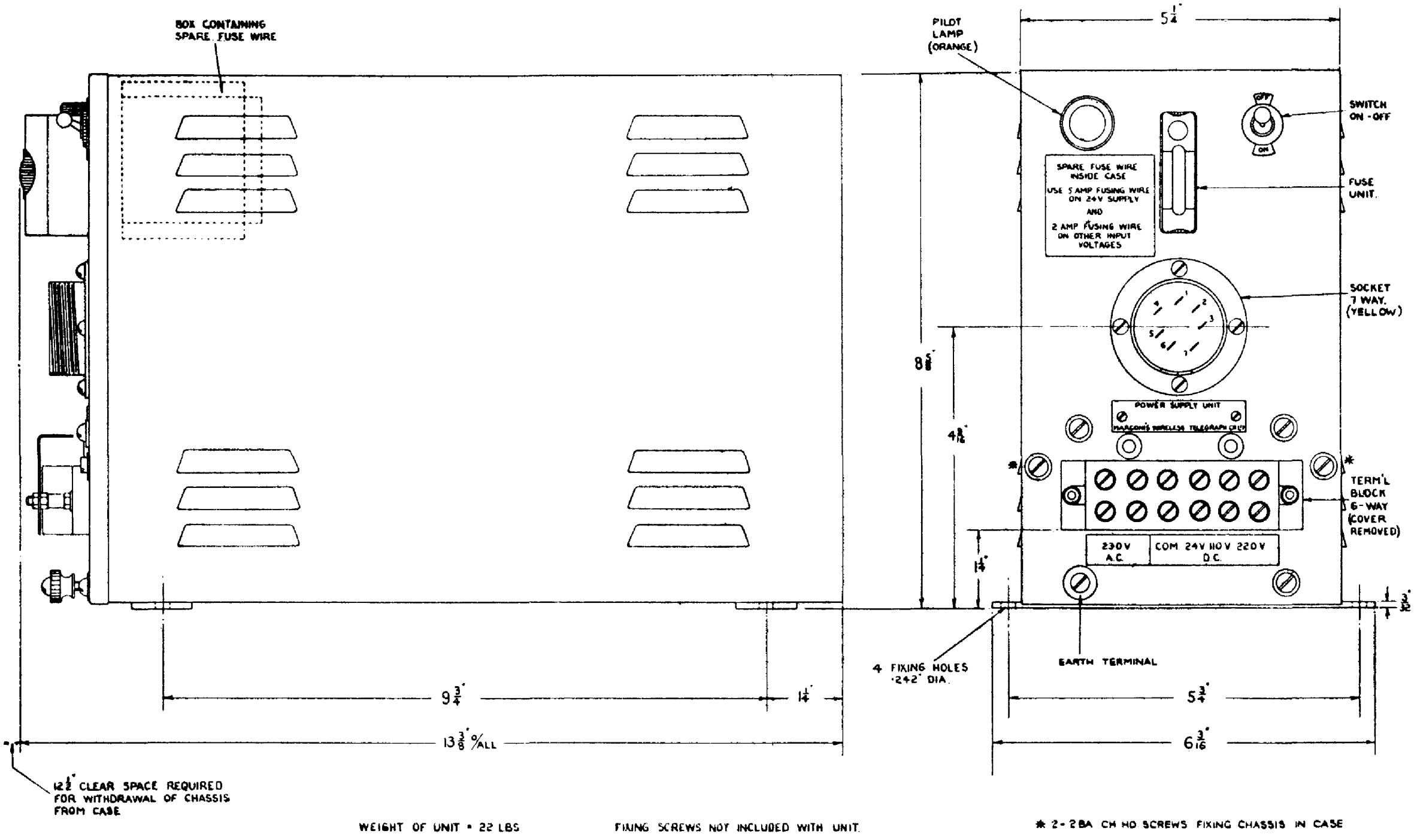

WZ. 1782

DIMENSIONS OF SUPPLY UNIT TYPE 889.

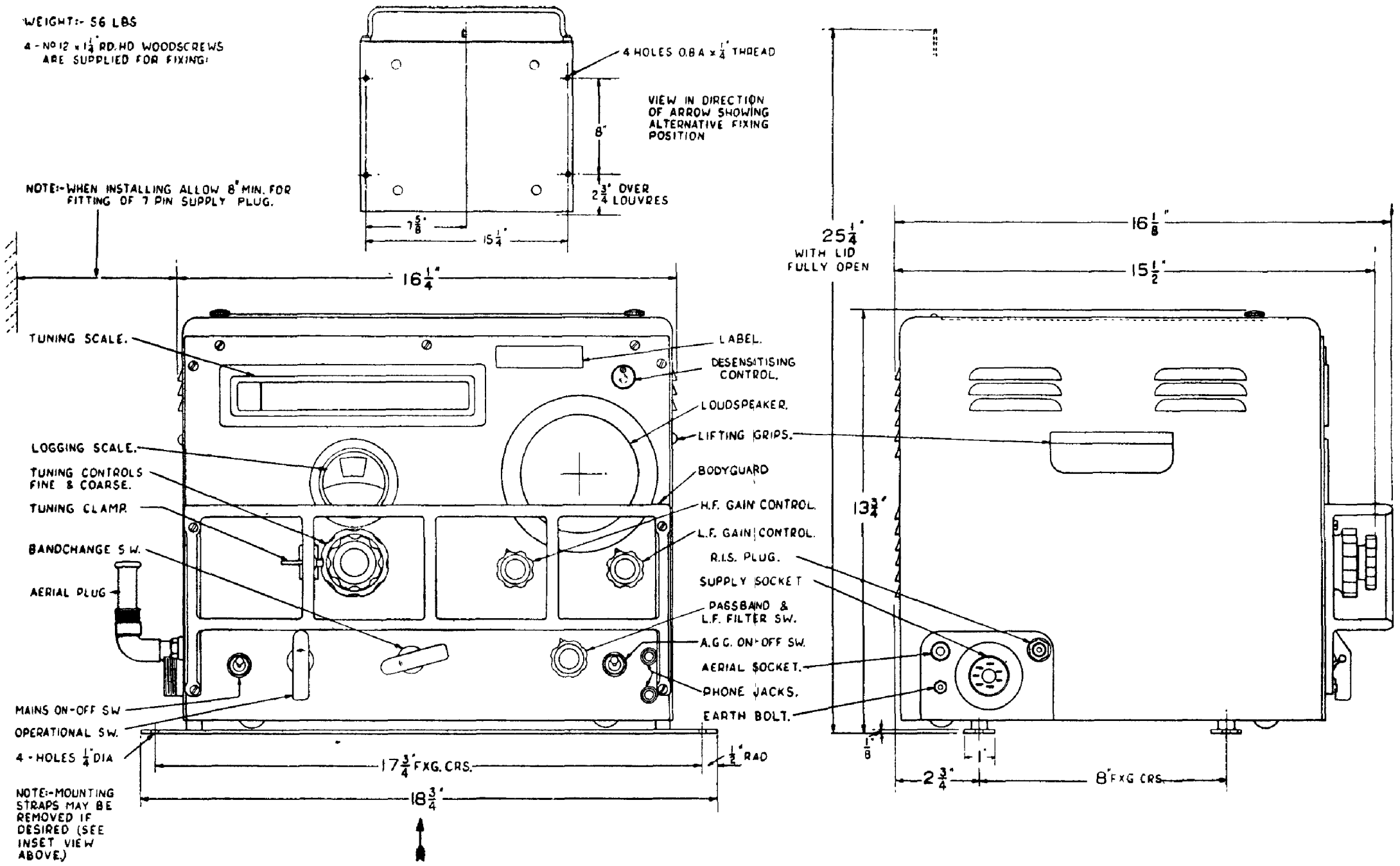

WZ. 1758

DIMENSIONS OF RECEIVER TYPES CR 300/1 AND CR. 300/2

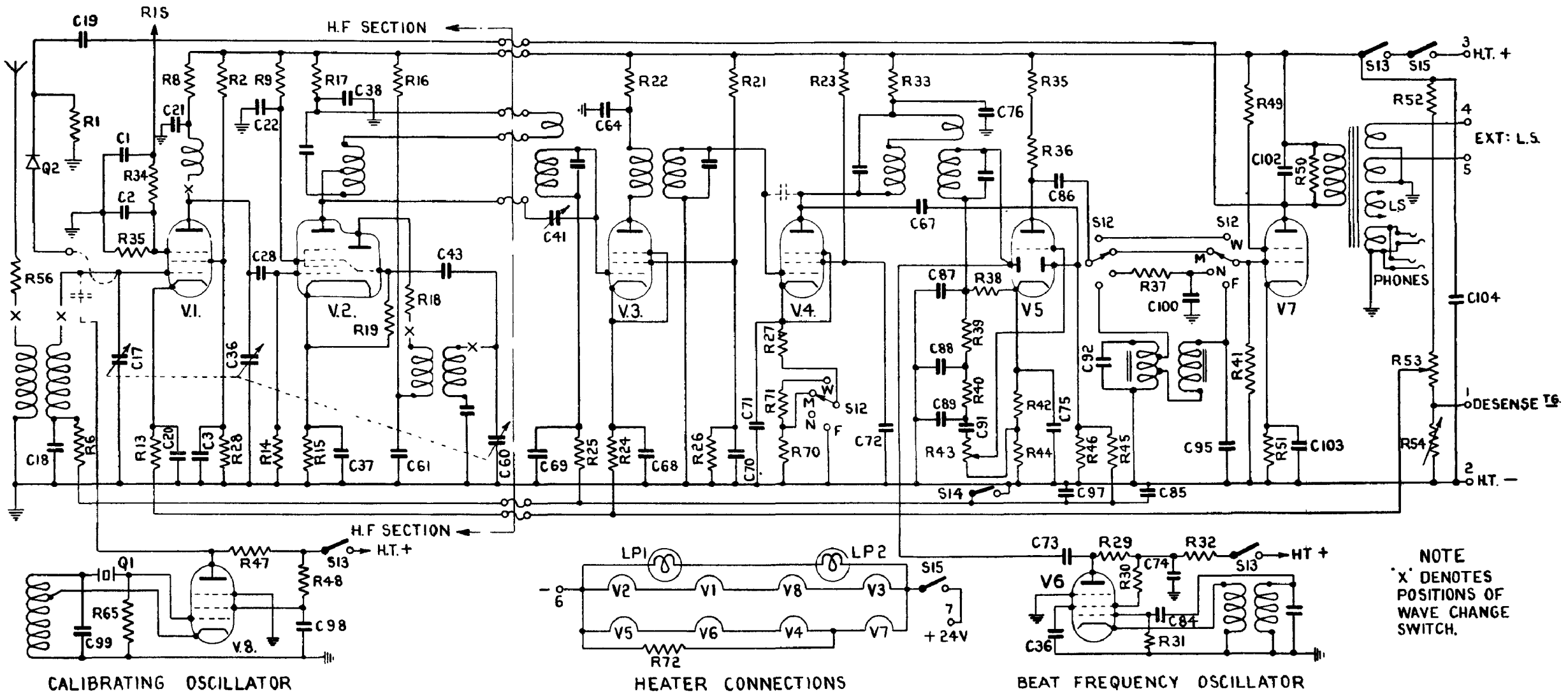

WZ. 1818. Sh. 1 (issue 2).

SIMPLIFIED CIRCUIT DIAGRAM OF TYPE CR. 300/1 AND CR. 300/2 RECEIVER.

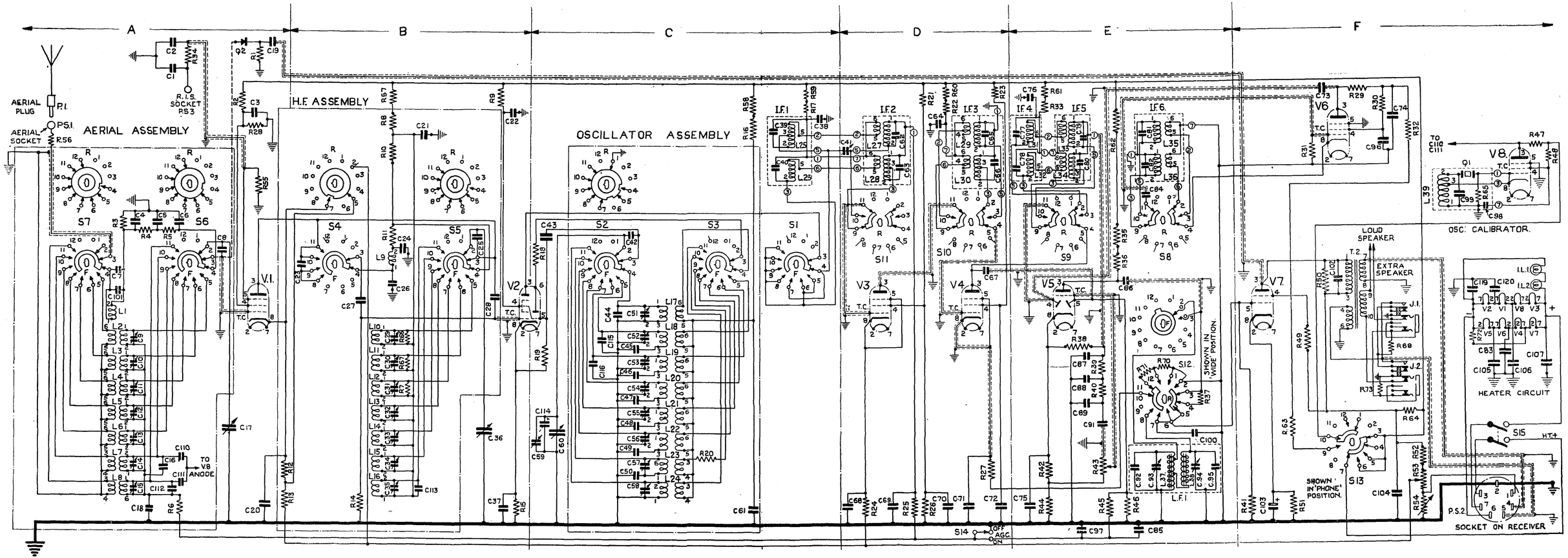

CIRCUIT DIAGRAM OF TYPE CR 300/1 AND CR. 300/2 RECEIVER.

WE/W. 6890. Sh. 1.

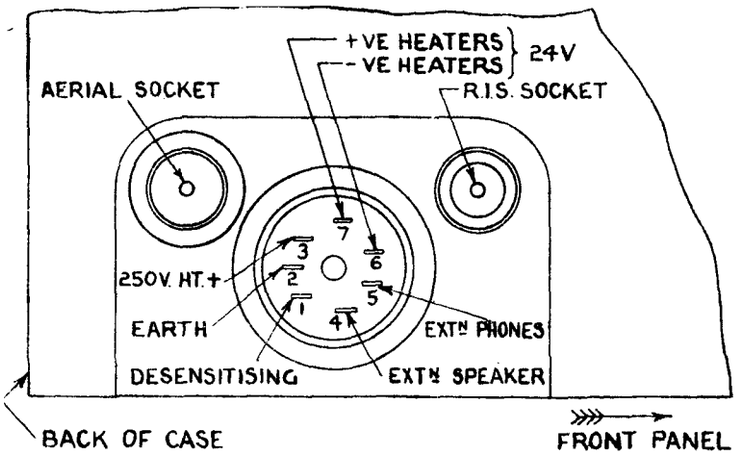

Fig. 5. Power Socket Connections.

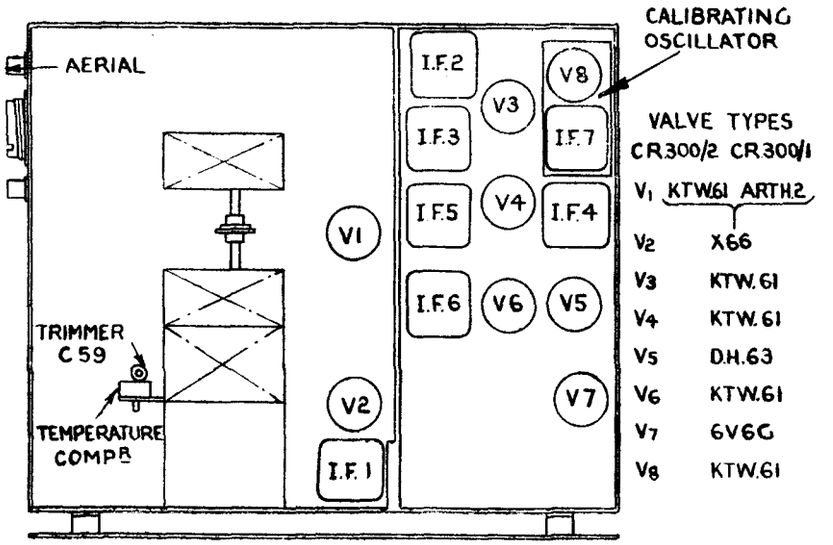

Fig. 6. Position of Valves in Receiver.

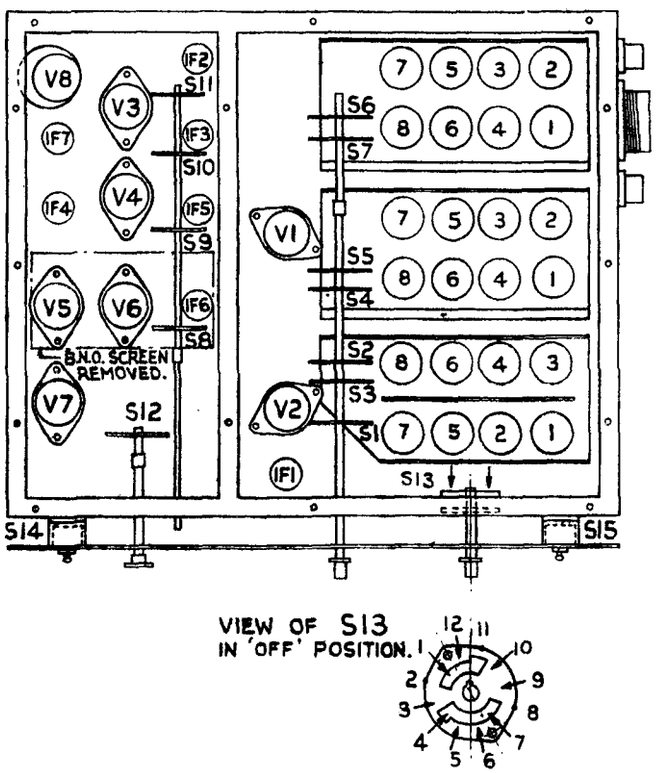

Fig. 7. Position of Switches.

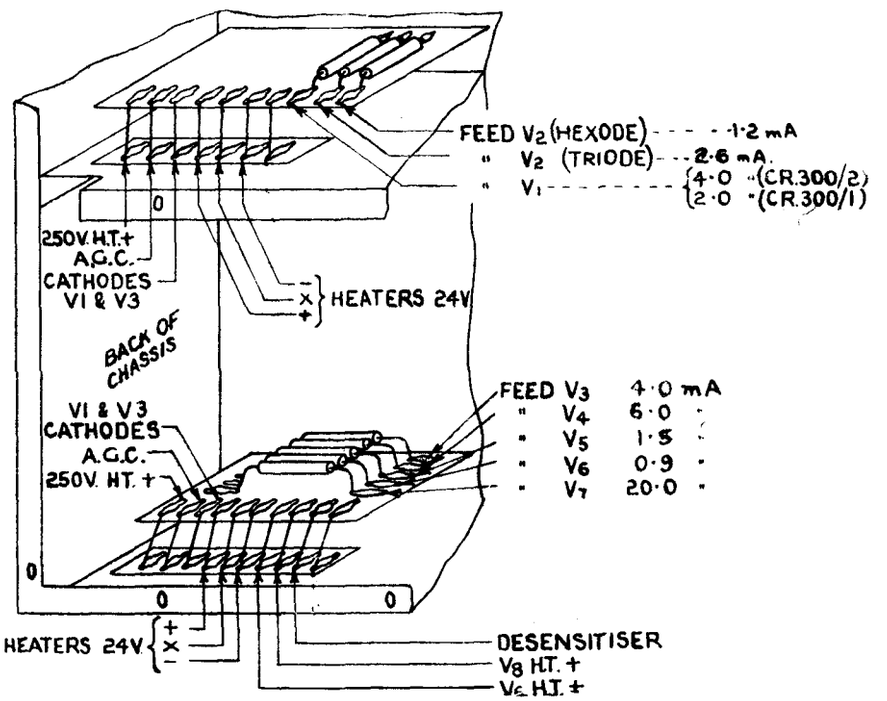

NOTE—In the CR.300/2 model the connection between the 3rd pair of tags from the right (V.8 H.T. +) is omitted.

Fig. 8. Checking Valve Feeds.